Context Plus

CAST XFP

Networkable Analogue Addressable Fire Alarm Control Panel

1 Loop, 32 Zone Panel
Part No. XFP501/CA/CON

2 Loop, 32 Zone Panel
Part No. XFP502/CA/CON

Engineering Manual

Approved Document No. DFU5010030 Rev 2 16/06/2021

CONTEXT PLUS CAST XFP 32 ZONE Menu Structure

AL1 - ACCESS LEVEL 1
AL2 - ACCESS LEVEL 2 (Code 3333)
AL3 - ACCESS LEVEL 3 (Code 4444)

* THE MENU OPTION SHOWN WILL ONLY BE AVAILABLE IF RELEVANT TO THE PANEL'S STATUS.

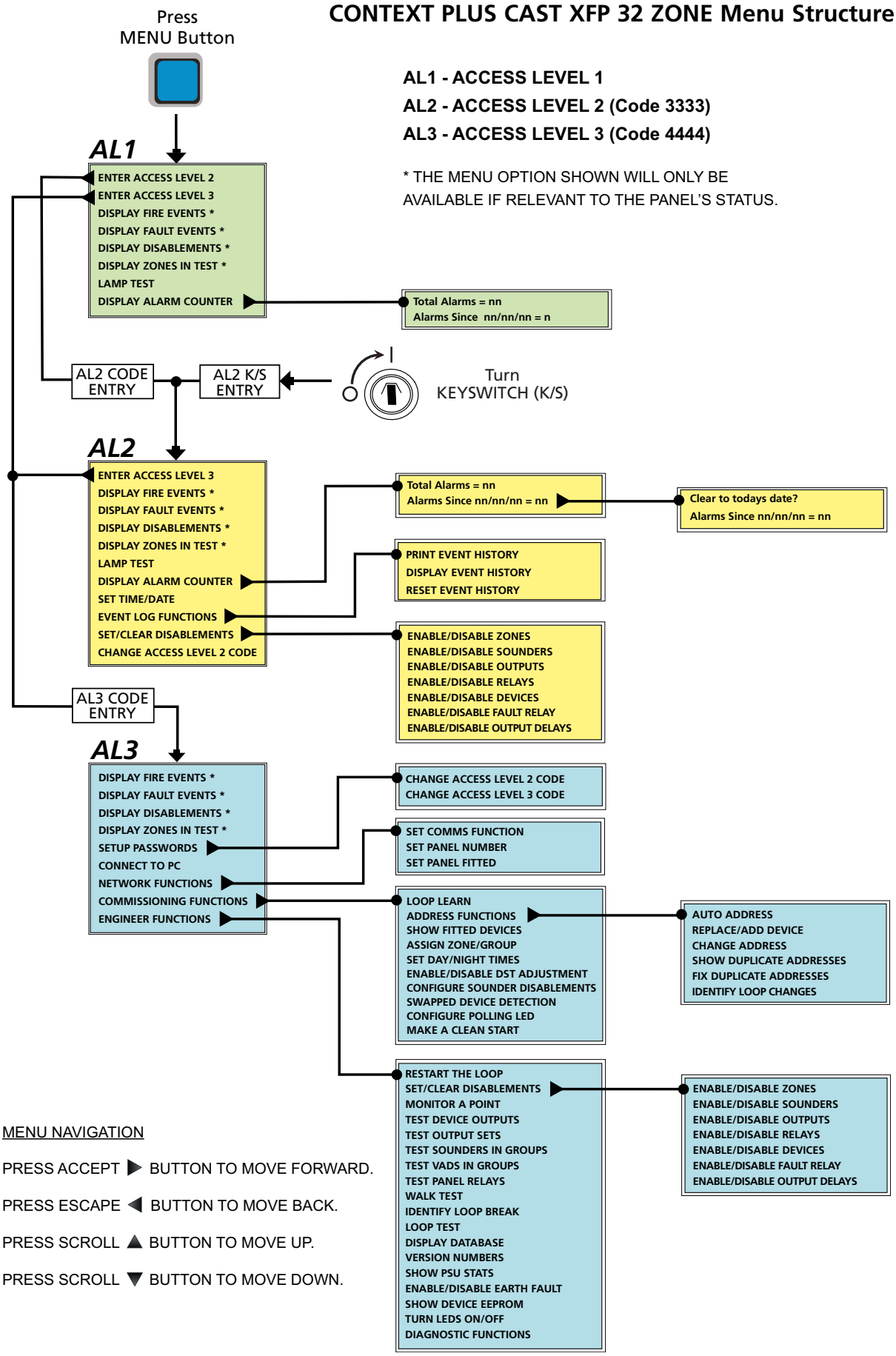

MENU NAVIGATION

PRESS ACCEPT ▶ BUTTON TO MOVE FORWARD.

PRESS ESCAPE ◀ BUTTON TO MOVE BACK.

PRESS SCROLL ▲ BUTTON TO MOVE UP.

PRESS SCROLL ▼ BUTTON TO MOVE DOWN.

CONTENTS

LOSS PREVENTION CERTIFICATION BOARD LPCB 176b

CE 22 2831

CONTEXT PLUS CAST XFP 1 Loop, 32 Zone
(XFP501/CA/CON)
2831-CPR-F4631

CONTEXT PLUS CAST XFP 2 Loop, 32 Zone
(XFP502/CA/CON)
2831-CPR-F4632

Context Plus Limited, Progress House, Newby Industrial Estate, Newby Road, Hazel Grove, Stockport, SK7 5DA, United Kingdom

Symbols General Warning Sign Danger Electrical Hazard

Read these instructions thoroughly before installation and operation

IMPORTANT NOTES

This equipment MUST only be installed and maintained by a suitably skilled and technically competent person. Ensure you have attended the Authorised Training Course before handling the panel.
This equipment is a piece of Class 1 permanently connected equipment and MUST BE EARTHED.
CAUTION: DO NOT connect or disconnect the panel's internal wiring / looms, or terminate field wiring at the PCBs, with the panel's power applied (either Mains or battery). Failure to observe this WILL destroy the panel's electronic components and the warranty will be void.

Items supplied with this panel

- Engineering manual (Document No. DFU5010030). **This manual MUST NOT be left accessible to the user.**
- User Manual / Log Book (Document No. DFU5020020)
- Hex key for unfastening / securing the panel lid
- Electrical accessory pack containing:
  6K8 0.25W EOL resistors for the two conventional sounder circuits
  T 1A H 250V 20mm ceramic fuse (spare primary fuse)
  3.15A F 20mm ceramic fuse (spare battery fuse)
  Battery connection kit (red wire, black wire, green link wire and cable ties)

System design

Fire alarm system design is beyond the scope of this document. A basic understanding of general fire alarm system components and their use is assumed. Contact the Fire Officer concerned with the property at an early stage in case there are any special requirements. We strongly recommend that a suitably qualified and competent person is consulted regarding the design of the fire alarm system and that the system is commissioned and serviced in accordance with the laid down specification and national standards. In the UK, we recommend you read BS 5839: "Fire Detection and Alarm Systems for Buildings (Code of Practice for System Design, Installation, Commissioning and Maintenance)". Other national, or local standards of installation should be referenced where applicable.

Cable types and limitations

All system wiring should be installed to meet national standards - in the UK these are BS 5839 Part 1 and BS 7671 (Wiring Regulations). Fire-resistant, screened cable should be used throughout the installation. For network wiring 2-core screened, enhanced fire-resistant cable is recommended. This not only shields the data moving through the cables from outside interference but is essential to ensure compliance with EMC regulations. Cables such as FP200, Firetuf, Firece and MICC may be acceptable provided they meet national standards / the system specification.

EN54 Compliance Statement

This fire alarm panel is fully compliant with the requirements of EN54 Part 2 (Fire detection and fire alarm systems, control and indicating equipment) and EN54 Part 4 (Fire detection and fire alarm systems, power supply equipment) and is certified as meeting these standards by the Loss Prevention Certification Board (LPCB) - unless stated.

NON EN54-2

Note that some of the engineering functions provided on the panel go beyond the scope of EN54-2. A caution symbol (left) is used to indicate where such a function is **non-compliant with EN54-2**. DO NOT affix the LPCB approval label (supplied) to the front of the panel if it has been configured to operate in a way that would make it non-compliant with the requirements of EN54-2.

Equipment guarantee

This equipment is **NOT** guaranteed unless the complete installation is installed and commissioned in accordance with the laid down national standards (in the UK this is BS 5839 Part 1) by an approved and competent person or organisation.

Anti-static handling guidelines
Always observe appropriate electro-static handling guidelines before handling the panel's PCBs, or any other static-sensitive components.

KEY FEATURES

The CAST XFP 1 loop, 32 zone (Part No. XFP501/CA/CON) and CAST XFP 2 loop, 32 zone (Part No. XFP502/CA/CON) analogue addressable fire alarm panels are designed for use with fire and security systems and offer the following features:

- Certification by the LPCB to EN54 parts 2 and 4.
- Full compatibility with CAST® - a powerful, proprietary communication protocol.
- Short-circuit protected loop drivers (rated at 500mA, 40V), each capable of supporting up to 255 addressable CAST devices per loop, giving 510 devices for a 2 loop panel. Each CAST Loop device is fitted with a short-circuit isolator.
- Two CAST device addressing options - automatically by the panel (AUTO ADDRESS & LOOP LEARN functions), or manually using the CAST Handheld Programmer (Part No. CAPROG).
- Ability to change a device's address.
- Ability to detect and fix duplicate addresses.
- Ability to detect swapped loop devices.
- Ability to turn all device polling LEDs on/off.
- Fast response time from fire detection to multiple output groups.
- Two independently programmable conventional sounder circuits.
- Two programmable auxiliary inputs (non-monitored).
- A fault relay output and three programmable relay outputs with volt-free changeover contacts.
- A selection of zone dependency functions (EN54-2 Clause 7.12, type A, B or C) as detailed below:
  Type A - If there is an alarm from a detector, the panel will look for a confirmatory alarm from the same, or another, detector in the same zone before a full alarm is established. If there is no confirmatory alarm, the first alarm will automatically reset.
  Type B - As type A except the confirmatory signal must be from another detector in the same zone.
  Type C - As type A except the confirmatory signal may also be from another zone and the first alarm will not automatically reset.
- A day (building occupied) and night (building unoccupied) timing function.
- An investigation delay period function (programmable for length of time, which zones it applies to and whether or not it operates in day/night mode).
- Individual sensitivity settings for each device.
- An integral 2.5A EN54-4 switched mode PSU.
- Earth fault monitoring.
- Keypad code to enter access levels 2 & 3. Keyswitch entry to access level 2.
- 40 characters of custom text per device.
- Comprehensive EN54-2 Clause 10 test with maintenance and commissioning functions.
- Windows based PC programming tools (Part No. XFP507) that **MUST** be used to configure the system.

Certified with the following options with requirements from EN 54-2: 1997:

- Clause 7.8 output to fire alarm devices.
- Clause 7.11 delays to outputs and a phased evacuation facility.
- Clause 7.12.1 Dependencies on more than one alarm signal – Type A
- Clause 7.12.2 Dependencies on more than one alarm signal – Type B
- Clause 7.12.3 Dependencies on more than one alarm signal – Type C
- Clause 7.13 alarm counter to record the number of alarm states (maximum of 999 counts).
- Clause 8.3 reporting of faults from points (heat detectors, optical detectors & multi-detectors).
- Clause 9.5 disablements of addressable points individually.
- Clause 10 test condition.

Networking (Optional)

Note: The CAST XFP network and XFP repeaters have not been assessed to EN54-2.

If required, the panel can be configured to sit on a non-redundant network of up to eight connected CAST XFP main panels (any variant), OR you can have up to eight XFP repeaters connected to one non-networked CAST XFP main panel. If you want to utilise either of these options, the panel will require a separately available network driver card (Part No. AFP711). See page 13 for details.

INSTALLATION AND WIRING

The fire panel enclosure

The panel is supplied with a hinged metal lid, metal back box and four separate PCBs (Main Control PCB, Power Supply PCB, Switch & Indicator PCB, LCD PCB). Space is available inside the panel for the rated capacity of VRLA backup batteries and an optional network driver card.

The panel **MUST** be installed indoors in an area that is **NOT** subject to conditions that are likely to affect its performance, e.g. damp, salt-air, water ingress, extremes of temperature, physical abuse, near sources of electromagnetic interference, such as high current machines, welding equipment, etc.

The panel should be sited at a height where it is easily accessible and in a prominent position within the building. Ideally, its front panel indicators should be at eye level. Typical locations for the panel are in the entrance foyer/hallway at ground floor level (the first and most obvious point of contact for emergency services), or a permanently manned security office.

It is recommended that you remove the panel's lid and base PCBs before first fix installation to protect the electronics from damage (see Fig.1 below).

Removing the lid and base PCBs

Fig.1 : Location of the panel's base PCBs and removal details

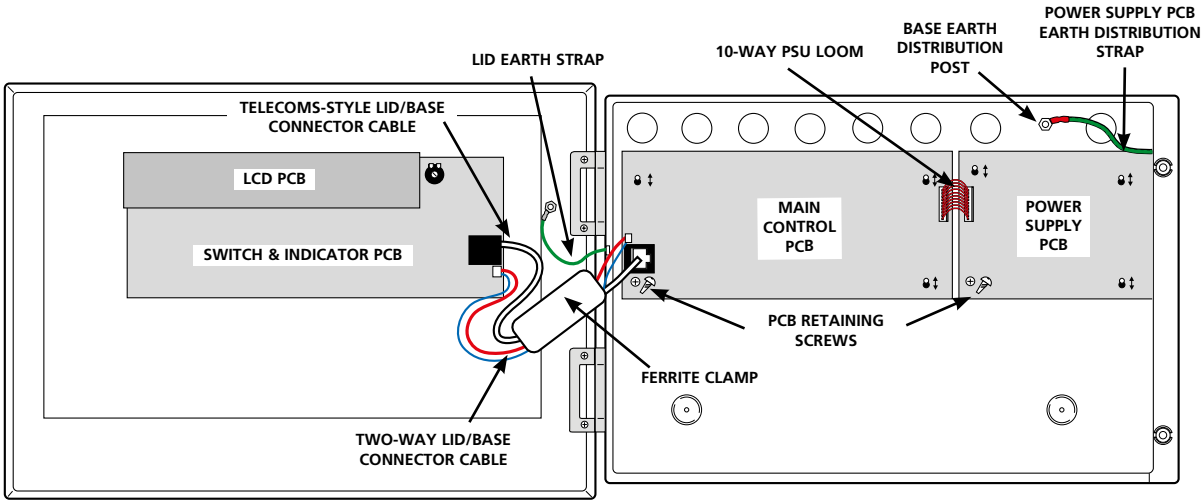

CAUTION: ISOLATE THE PANEL'S MAINS AND BATTERY SUPPLIES <u>BEFORE</u> REMOVING THE LID AND BASE PCBs.

<u>To remove the lid:</u>

- Undo the two lid screws using the hex key provided.
- Hinge the lid 180° to the left (do not overbend the hinges) and remove the lid's earth strap spade connector.
- Disconnect the telecoms-style lid/base connector cable at the Main Control PCB.
- Disconnect the two-way lid/base connector cable at the Main Control PCB.
- Remove the four retaining nuts that secure the hinges and lift off the lid.

<u>To remove the base PCBs:</u>

- Disconnect the 10-way PSU loom at the Main Control PCB.
- Pull the Power Supply PCB's earth distribution strap off the spade connector at the base earth distribution post.
- Remove the PCB retaining screws located bottom left hand side of both PCBs.
- Slide the PCBs up and over their mounting pillars, taking care not to damage any components.
- Store the PCBs in a clean, dry place which is free from vibration, dust and excessive heat. Retaining the PCBs in a suitable cardboard box will also guard them against mechanical damage.

Mounting the base onto a wall

The panel can be surface, or semi-flush mounted onto a vertical wall, ≤2 m mounting height, using the four mounting holes provided (note that an optional bezel, Part No. XFP735, is available for semi-flush mounting).

To access the mounting holes, first remove the panel's lid and base PCBs, as detailed on page 6. The mounting holes are suitable for use with No.8 roundhead or countersunk screws.

Always assess the condition and construction of the wall and use suitable screw fixings for the in-service weight of the product. Any dust or swarf created during the fixing process must be kept out of base.

Fig.2 : Location of mounting holes and knockouts / side view of panel for flush mounting

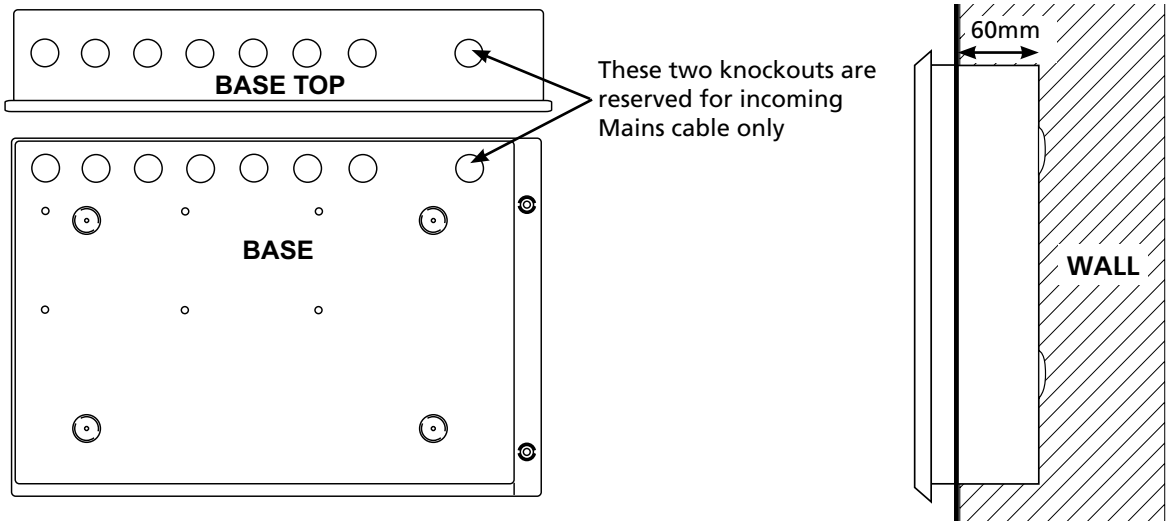

Planning the cable layout in the panel

All cables should be brought into the panel via the knockouts provided.

Note that the analogue loop and conventional sounder circuit cabling is classed as extra low voltage and **MUST** be segregated away from Mains voltages. Careful planning is needed to ensure this.

Leave sufficient tails inside the panel to ensure straightforward connection of the field wiring to the panel's terminals. Knockouts should be removed with a sharp, light tap using a flat 6mm broad-bladed screwdriver, as shown in the diagram (right).

Always ensure if a knockout is removed, the hole is filled with a good quality strain relief cable gland. Any unused knockouts must be securely blanked off.

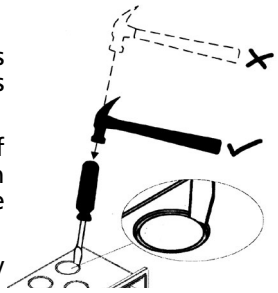

Mains wiring

All wiring should be installed in accordance with the current edition of the IEE Wiring Regs. (BS 7671), or relevant national standards. The minimum requirement for the Mains supply to the panel is fixed wiring (no less than 1mm^2 and no greater than 2.5mm^2), either using 3-core cable, or a suitable three conductor system fed from an isolating switched fused spur at 3A, or a 6A Type B circuit breaker to IEC/EN60898-1. The Mains supply **MUST** be exclusive to the panel and be reliably earthed at the indicated earthing post.

As an alternative to a switched fused spur, a double-pole isolating switch (S), with 3mm air gaps on the contacts & switching L & N only, may be used in the Mains feed from the Main Distribution Board (A) to the Panel (C), providing it meets the appropriate wiring regulations (see drawing below).

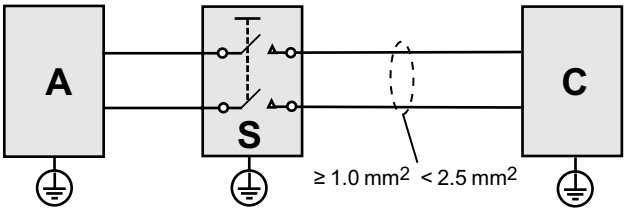

Connecting Mains to the Power Supply PCB

The panel's PSU combines the functions of a power supply unit, battery charging unit, battery monitoring unit and earth fault monitoring unit. It is positioned in the panel's enclosure as shown in Fig.3 below.

CAUTION: DO NOT CONNECT MAINS TO THE POWER SUPPLY PCB UNTIL THE INSTALLATION IS COMPLETE AND ALL RELEVANT PCBs ARE CORRECTLY FITTED IN THE PANEL.

Fig.3 : Power Supply PCB layout and Mains connection details (Full Protective Cover & Cable Cover shown fitted)

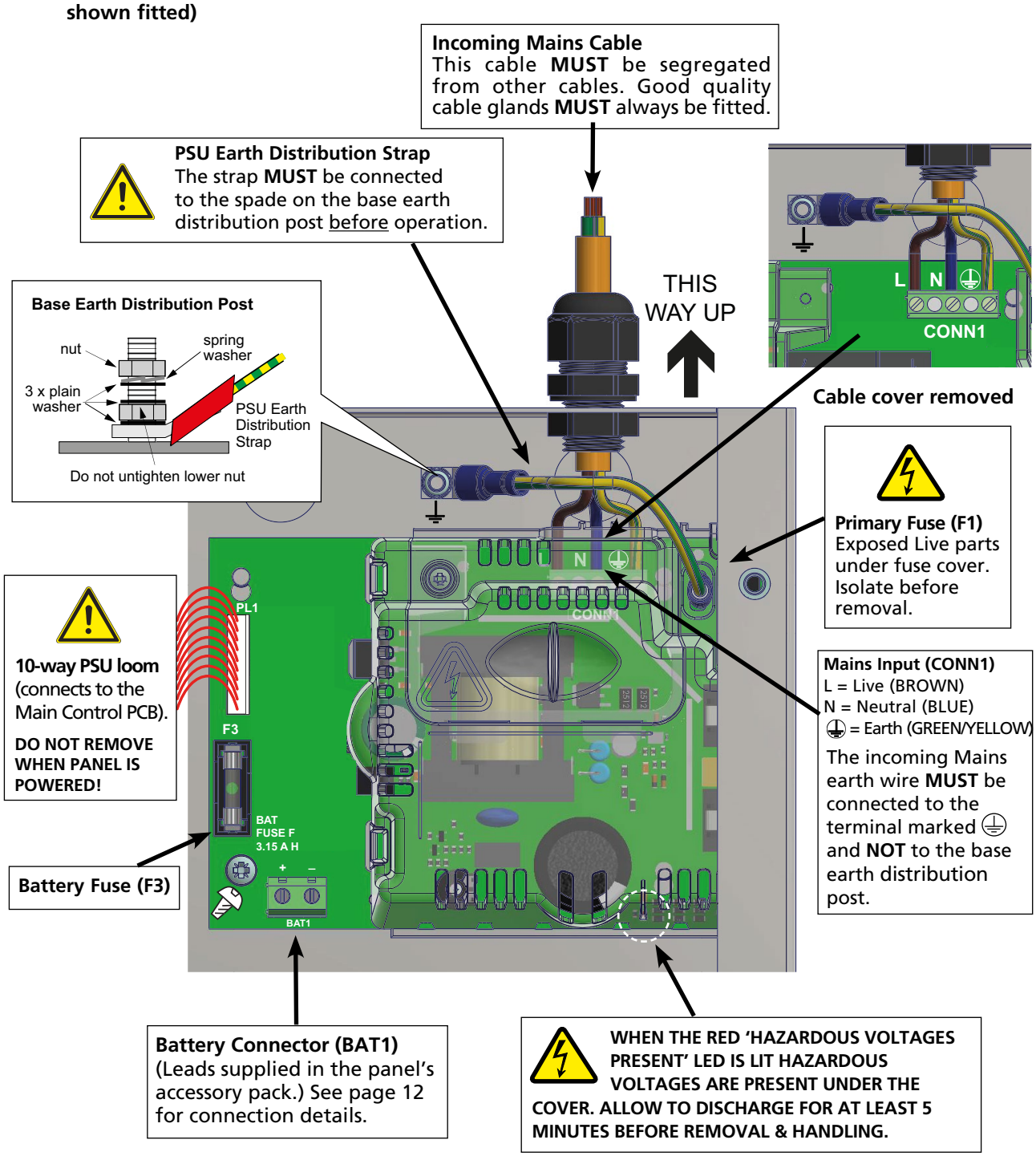

Analogue addressable loop wiring

Fig.4 below shows a typical analogue addressable loop complete with detectors, manual call points, loop-powered sounders/VADs and I/O units. Connect the loop to the relevant 5mm connector block on the Main Control PCB and terminate screens at the panel's earth (Eth) terminals, as detailed on page 10.

Fig.4 : Typical analogue addressable loop

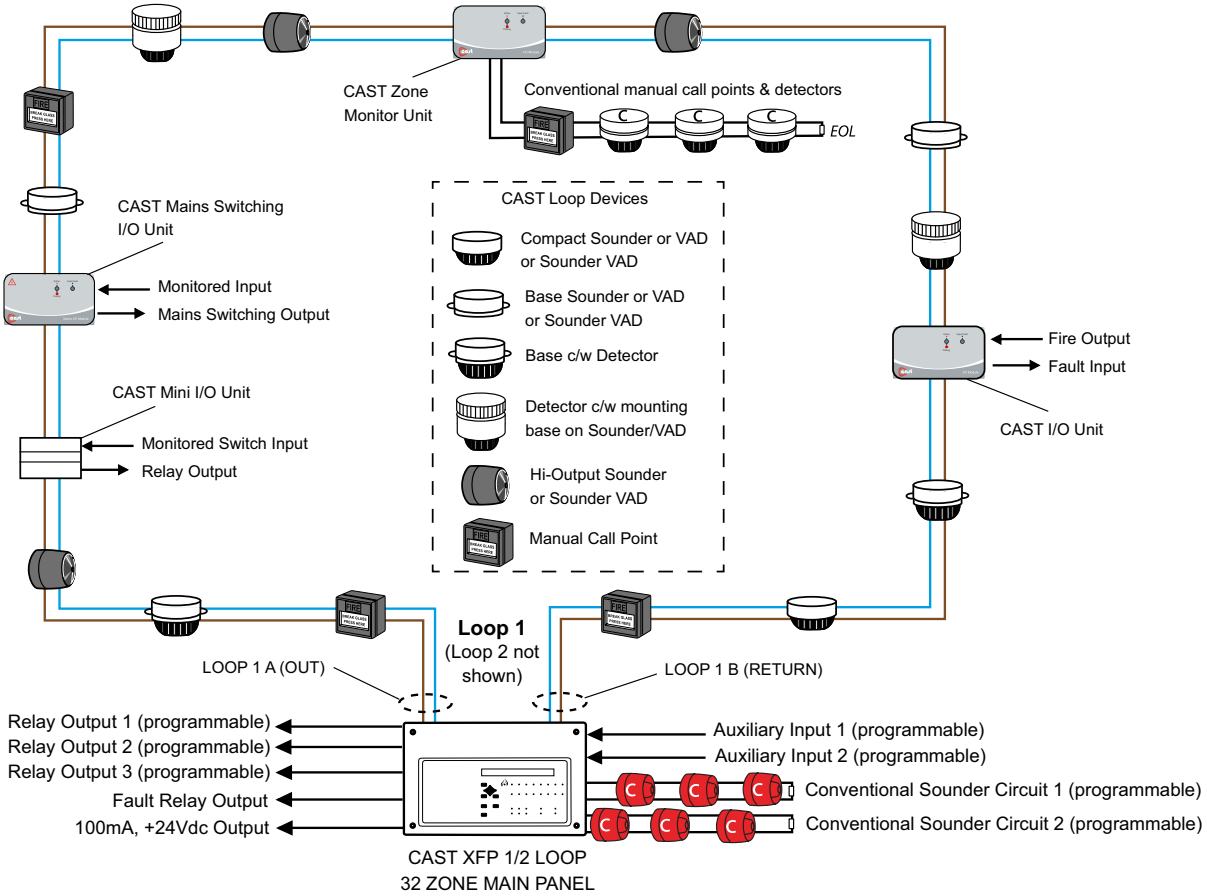

Design issues - reducing faults and their consequences

To ensure a reliable system, it should be designed and maintained to local design and installation regulations. The CAST XFP panel has a short circuit protected loop driver fitted and also short circuit isolators fitted in every CAST loop device. A single short circuit or open circuit fault will have no detrimental affect on the operation of the system but a loop integrity fault will be shown at the panel.

Note that a critical design issue with any analogue fire system is the combined effect of loop resistance, loop capacitance and the current demand of devices connected to the loop. Factors that influence this include loop length, cable diameter, cable type and the number and type of devices. There are no hard and fast rules regarding these factors as every situation is unique. However, if the following general rules of thumb are followed, the loop WILL almost certainly work.

- **Absolute maximum loop length = 1km, with either 1mm² or 1.5mm² cables.**
- **If loop sounders are required, use 1.5mm² cable and DO NOT fit more than the maximum circuit rating detailed in the technical specification (see page 48).**

The above **SHOULD NOT** be considered the maximum panel operating conditions as many other permutations are possible. Always refer to the supplied device instructions before installation.

Connecting the analogue loop to the Main Control PCB

One or two analogue loops are provided (model dependent) each capable of supporting up to 255 addressable devices per loop, giving 510 devices for a 2 loop panel.

Each loop should be connected to the Main Control PCB terminals marked: **A+, A-** (LOOP A OUT) and **B+, B-** (LOOP B RETURN), as shown in Fig.5 below. The loop's earth screens should be connected to the Main Control PCB terminals marked: **Eth**.

Fig.5 : Typical analogue addressable loop connection (2 loop panel shown)

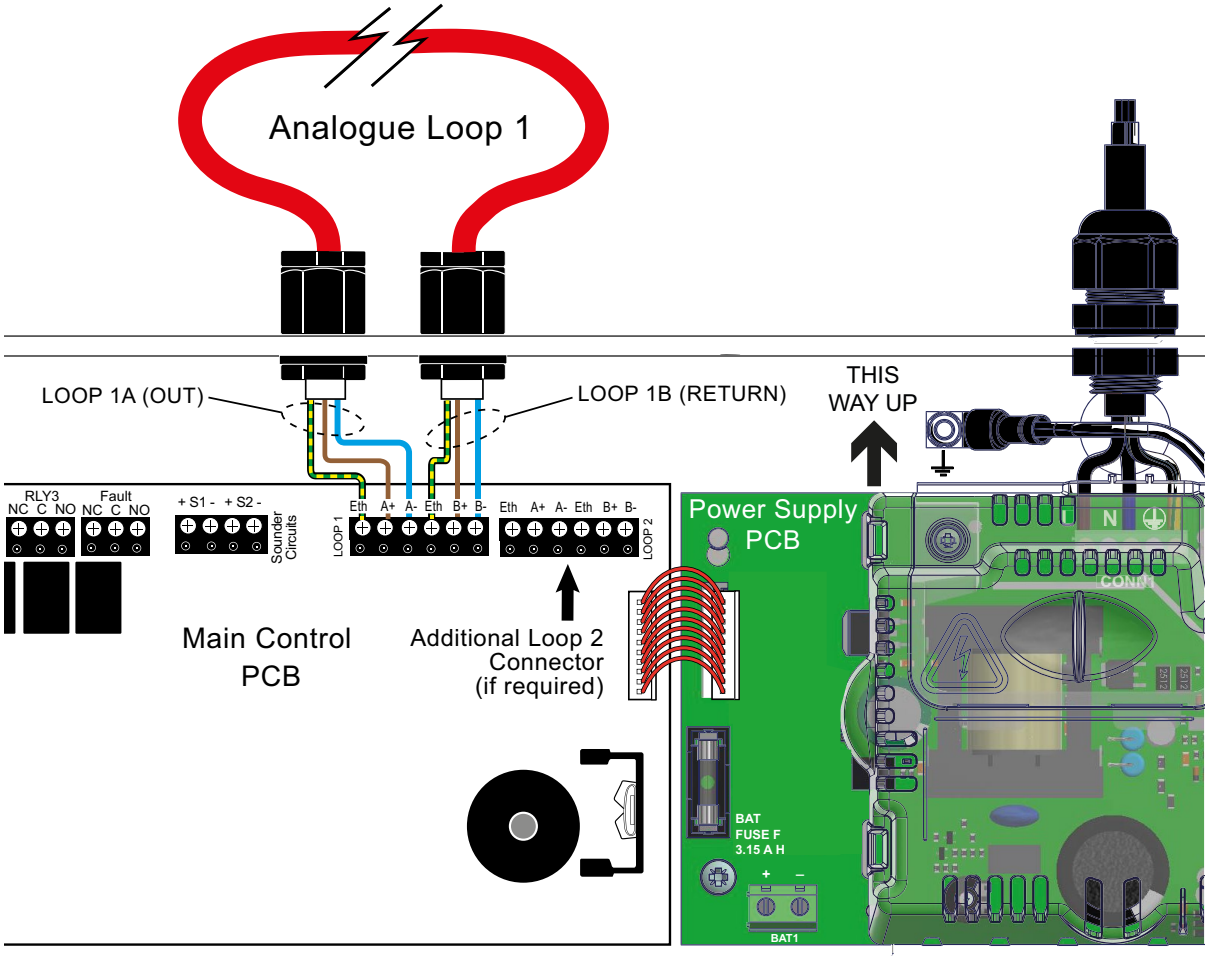

Conventional sounder circuit wiring

Two conventional sounder circuits are provided. See technical specification (page 48) for circuit limitations. If a full complement of sounders are to be used, split them equally across both circuits.

A 6k8 end of line (EOL) resistor (provided) **MUST** be connected at the end of each sounder circuit to allow the wiring to be monitored. If the sounder circuit is unused, the 6k8 resistor **MUST** still be fitted at the panel terminals.

Each sounder circuit should be connected to the Main Control PCB terminals marked: **S1+, S1- and S2+, S2-**, as shown in Fig.6 (page 11). Terminate earth screens at the panel's base earth distribution post, as shown in Fig.6, page 11.

Fig.6 : Typical conventional sounder circuit connection

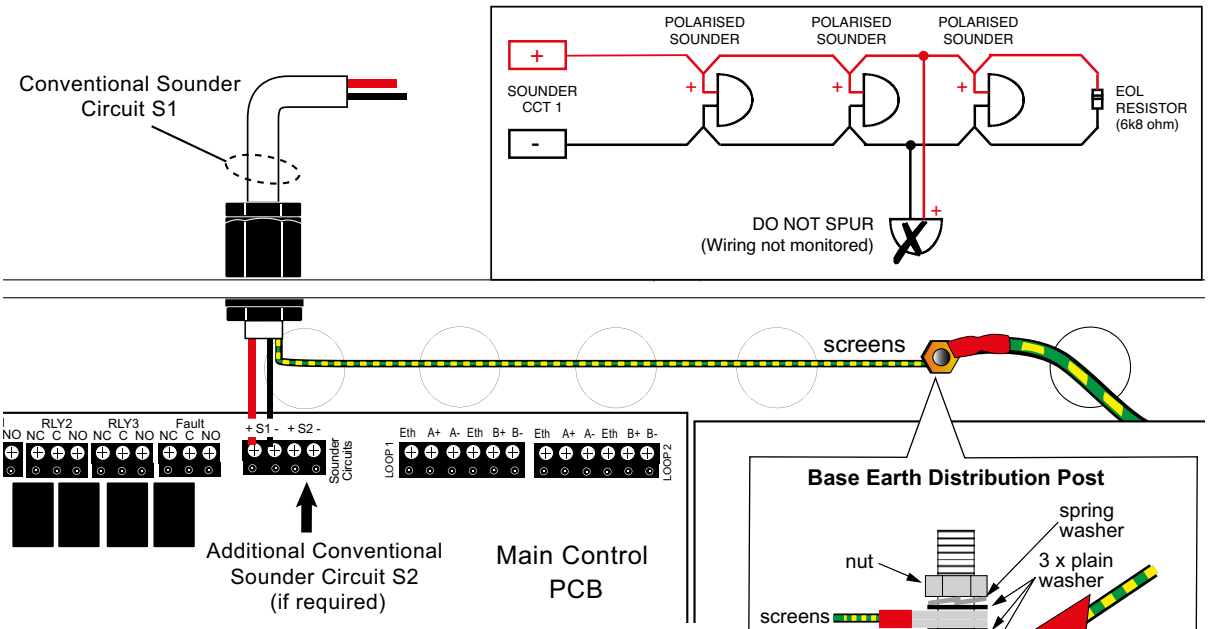

Note about earthing of screens

All screens should be adequately insulated and connected between the nut and washers on the base earth distribution post using crimp connectors. The base earth distribution post is provided for terminating earth screens or drains and is **NOT** the main earthing point. The installer must review the external earth bonding (if required) with respect to the national wiring rules. If the installation requires protective earth bonding, then this must be applied externally and in conjunction with the type of earthing system employed on site.

Auxiliary input wiring

Fig.7 : Typical auxiliary input wiring

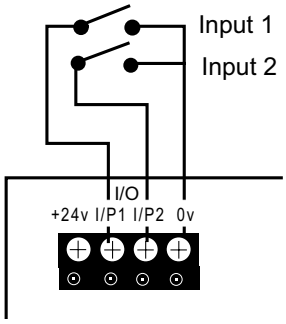

Two programmable auxiliary input connections (non-monitored) are provided. These can be programmed using the panel's PC programming tools to operate as required. The wiring for each input should be connected to the Main Control PCB terminals marked: **I/O**, as shown in Fig.7 right.

If applicable, i.e. in electrically noisy environments, input wiring screens should be terminated at the panel's base earth distribution post, as detailed in Fig.6 above.

Relay output wiring

Four volt-free relay output connections are provided - a failsafe fault output*, which switches for any fault condition and three programmable auxiliary relay outputs. All four relays are capable of switching 1A @ 30Vd.c. and **MUST NOT** be used for directly switching Mains voltages.

***** *In the event of total de-energisation of the fire panel the fault relay will change state.*

The three auxiliary outputs (Relays 1, 2 and 3) can be programmed using the panel's PC programming tools to operate as required but their default operations are:

Relay 1 : Switches when any zone goes into fire, switches back when the panel is silenced.

Relay 2 : Switches when any zone goes into fire, switches back when the panel is reset.

Relay 3 : Has no default operation.

Fig.8 : Relay output detail

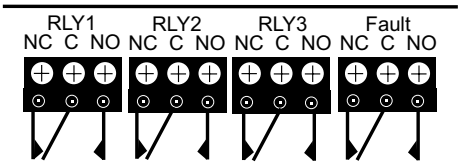

It is recommended that customers wire to the normally closed (N/C) terminals on the fault relay, as this is standard industry practice.

Fig.8 (right) shows how the outputs work.

Remote PC connection

A four-way RS232 molex connector (PL1) is provided on the Main Control PCB for the connection of a Windows based PC/laptop.

The **ONLY** way to program this panel is to use the panel's PC programming tools (Part No. XFP507).

The SAF7070000 lead supplied with the tools should be used to connect the panel and PC as shown in Fig.9 right.
Note: A USB to RS232 connector is also available (Pt. No. SAF8080000).

Fig.9 : Connecting a PC to the panel's RS232 connector

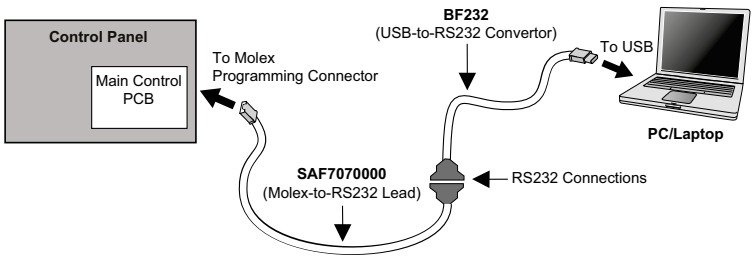

Aux. 24V output

One fused 24Vd.c. output, rated at 100mA, is provided and can be used for supplying power to ancillary fire alarm equipment.

Installing the standby battery supply

There is a risk of explosion if incorrect battery types or sizes are used. Always replace both batteries and always dispose of used batteries in accordance with the battery manufacturers instructions and local regulations. Batteries are heavy and can produce dangerously high currents if shorted. Take care when handling and routing battery leads to avoid damage.

Two new, good quality and fully charged 12V valve regulated lead acid (VRLA) batteries are required as the emergency stand-by power supply for the panel. The batteries should be connected in series and located in the panel's enclosure, as shown in Fig.10 below. Battery leads, link wire and cable ties are provided in the panel's accessory pack. Run the battery leads through the slits in the panel's lower plastic ribs and secure the batteries into position using the cable ties.

The panel's sophisticated battery monitoring unit protects the batteries against deep discharge by activating a cut off circuit when the stand-by supply voltage reaches 21V approx. If batteries are not fitted, are discharged or in poor condition, a PSU fault will show at the panel.

The capacity of the batteries used will depend upon the required stand-by time. To calculate the batteries required for any given stand-by period.

Fig.10 : Battery location and connection details

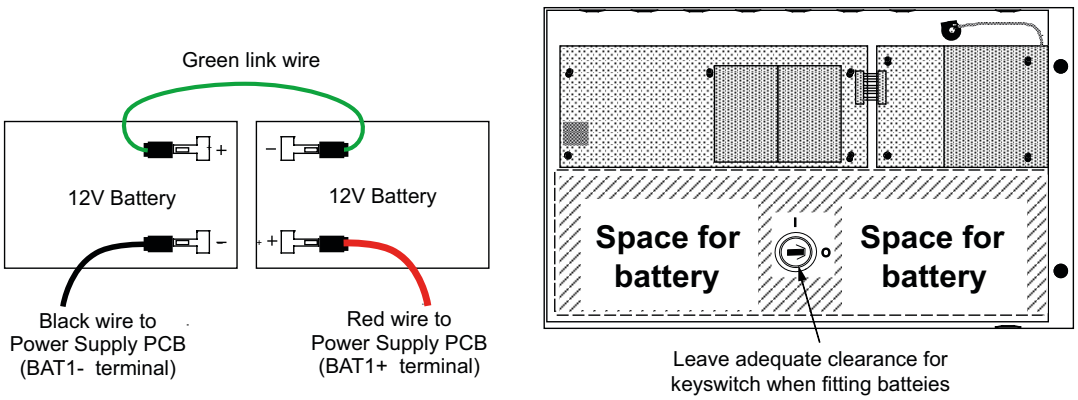

Network/repeater wiring (optional)

Note: The CAST XFP network and XFP repeaters have not been assessed to EN54-2.

CAST XFP's network protocol allows connection of up to eight CAST XFP main panels (any variant) over a 2-wire RS485 non-redundant network. Alternatively, the network can connect up to eight XFP repeaters to one non-networked CAST XFP main panel. For network wiring 2-core screened, enhanced fire-resistant cable is recommended.
It is **NOT** possible to mix CAST XFP main panels and XFP repeaters on the same network.

Key features of the non-redundant network protocol when used for connecting CAST XFP main panels:

- Allows the connection of up to eight CAST XFP main panels (any mix of 1 loop 16 zone CAST XFPs and 2 loop 32 zone CAST XFPs)
- Up to 1km of cable may be fitted to a CAST XFP main panel network.
- Each networked CAST XFP main panel can be programmed to:
  Accept Fires from other main panels.
  Accept Faults from other main panels.
  Accept Control actions from other main panels, e.g. Silence Alarm Sounders and Control Panel Reset.
  Accept Disablement commands from other main panels for zones, sounders and output sets.
  (Each of these four functions may be individually selected via the panel's PC programming tools.)
- All panels monitor all other panels for network wiring faults.
- Fires on remote panels are displayed on local panels including the point description of the alarm's origin.
- Faults on remote panels are displayed on local panels.
- Cause and effects can be programmed into local panels dependent on which remote panel is in alarm.
- The network supports the programming of site information into remote panels from a PC connected at a local panel.
- Time and date is common to all panels throughout the network.

Key features of the non-redundant network protocol when used for connecting XFP repeaters

- Allows the connection of up to eight XFP repeaters (any mix of 1 loop 16 zone repeaters and 2 loop 32 zone repeaters) to any non-networked main panel.
- Up to 500m of cable may be fitted to an XFP repeater network.
- Each XFP repeater offers all the functions and controls of a CAST XFP main panel.

Any CAST XFP main panel connected to the non-redundant network requires the installation of a network driver card (Part No. AFP711), as shown in Fig.11 below. Repeaters come with a network driver card already fitted. Typical network wiring details are shown in Fig.12, page 14.

Fig.11: Installing the Network Driver Card

CAUTION: BEFORE INSTALLING THE NETWORK DRIVER CARD, ISOLATE THE MAINS SUPPLY AND DISCONNECT THE PANEL'S BATTERY BACK-UP SUPPLY.

With reference to the diagram below:

- Disconnect the 10-way PSU loom, the lid/base connector cable and all remaining connections from the top of the Main Control PCB.
- Unfasten the retaining screw at the bottom left of the Main Control PCB and slide the PCB up and over its mounting pillars.
- Insert the two hexagon spacers (supplied with the network driver card) through the holes on the Main Control PCB and secure them using the nuts and washers (supplied), see right.
- Take the network driver card and line its holes up with the two hexagon spacers, ensuring that it's 6-way pin connectors are correctly inserted the Main Control PCB.
- Secure the card onto the hexagon spacers using the two 6mm slotted screws (supplied).
- Refit the Main Control PCB and all relevant connection cables previously removed. Ensure that the PCB retaining screw is firmly fastened down.

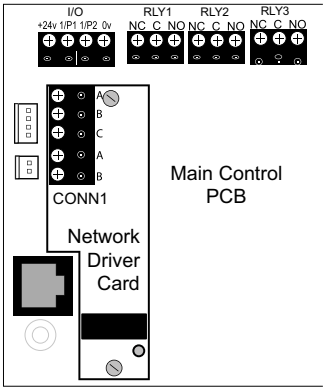

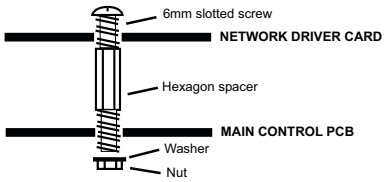

Note: DIP switch (SW1) on the network driver card has no function when used with this panel. However, all networked CAST XFP main panels require a unique ID number (1 to 8) assigning.
To assign this number and set up network comms, see NETWORK FUNCTIONS page 22 for details.
XFP repeaters DO NOT require an ID number.

Fig.12 : Typical network wiring

The network wiring should be installed to meet BS 5839: Part 1 and BS 7671 (Wiring Regulations) and/or other national standards of installation where pertinent - see 'cable types & limitations', page 4.

It is recommended that 2-core screened, enhanced fire-resistant cable ≥1 mm^2 is used for network wiring.

At each network driver card, connect A to A, B to B and terminate incoming and outgoing screens to terminal C only as shown below.
At **ONE** network driver card only, connect A to A, B to B and terminate screens to the panel's base earth distribution post as shown below.

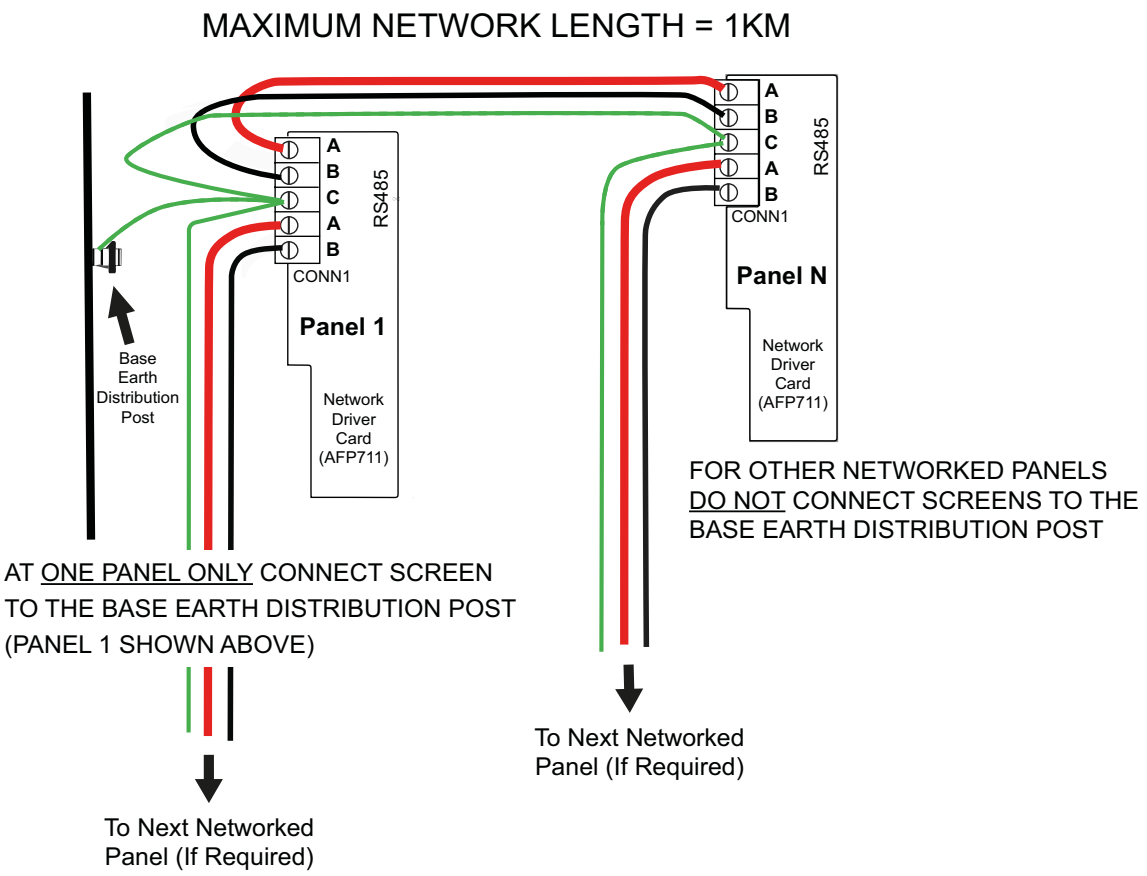

CONTROLS AND INDICATORS

Front panel layout

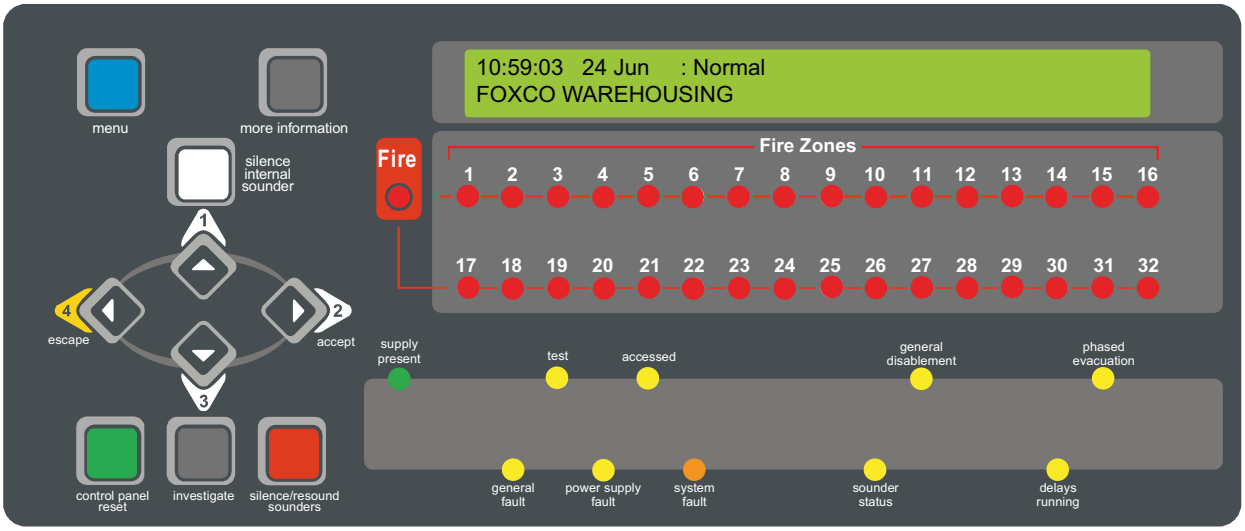

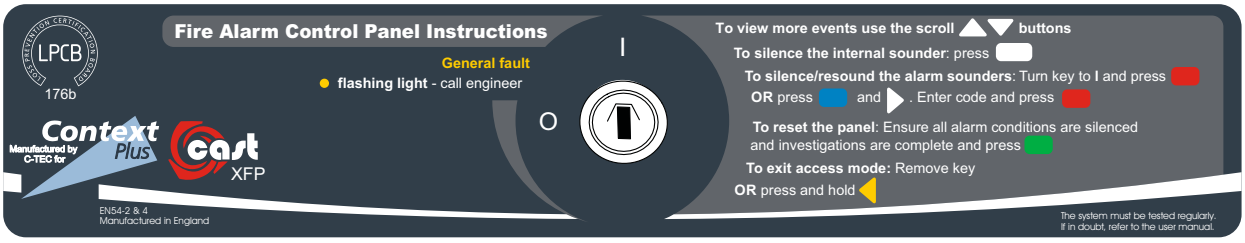

LED Indicators

Liquid Crystal Display	Provides detailed information on the status of the system (the type of messages displayed and what they mean is covered in greater detail in the panel's separate user manual).
(General) Fire	Flashes red when there is a fire condition on any zone and goes steady red when the alarm is silenced. Subsequent fire conditions will restart the (General) Fire indicator flashing until it is silenced again.
Fire Zones (1-32)	One or more of these indicators will flash red in a zone alarm condition and will go steady when silenced.
Supply Present	Normally lit green to show that all of the panel's power supplies are functioning correctly.
Test	Lit yellow when the panel is in walk test mode. This LED does NOT illuminate for any other test condition.
Accessed	Lit yellow when the panel is in access levels 2 or 3.
General Disablement	Lit yellow when one or more zones, sounders, outputs, relays, devices, output delays are disabled.
Phased Evacuation	Flashes yellow when there is a phased evacuation in progress.

LED Indicators (continued)

General Fault	Flashes yellow when there is a fault condition on the panel. Will always be lit in conjunction with at least one other fault LED.
Power Supply Fault	Lit yellow when the panel's power supply or Mains has failed or the panel's standby battery is in poor condition.
System Fault	Lit amber when a system error, such as a microprocessor fault, occurs AND REMAINS LIT EVEN IF THE SYSTEM FAULT CLEARS. THIS SYSTEM FAULT LED CAN ONLY BE CLEARED BY PRESSING THE CONTROL PANEL RESET BUTTON AT AL2 OR AL3.
Sounder Status	Flashes yellow when a fault is detected on either of the panel's two conventional sounder circuits or if there is a sounder disablement anywhere on the system.
Delays Running	Lit yellow when one or more output delays have been programmed by an engineer. Flashes yellow when one or more output delays are running.

Button controls

More Information	Displays additional information on any fire or fault conditions that appear on the panel's display. Will also display additional context dependent information where appropriate.
(Scroll Up) ▲ 1 (Scroll Down) ▼ 3	Dependent on the status of the panel, these two buttons: • scroll vertically through any fire/fault/disablements/test conditions that appear on the panel's display • scroll vertically through the panel's user menus • select Yes/No in the panel's menu options • manipulate date, time and disablement settings, etc • serve as code input buttons to access levels 2 or 3.
Accept ▶ 2 Escape ◀ 4	Dependent on the status of the panel, these two buttons: • scroll horizontally through the panel's user menus • escape or accept options available in the panel's user menus • serve as code input buttons to access levels 2 or 3.
Menu	Provides access to the panel's menus
Silence Internal Sounder	Silences the panel's internal sounder (also serves as a code input button when performing a clean start, see page 34)
Control Panel Reset	Resets the panel when the sounders are silenced (access levels 2 & 3 only)
Silence / Resound Sounders	Silences or resounds the system's sounders (access levels 2 & 3 only)
Investigate	Starts the panel's investigate timer function (access levels 2 & 3 only)

Keyswitch control

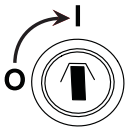

Turning the keyswitch to the armed position **'I'** gives the user instant access to access level 2 (authorised user level). The key is non-removable in position 'I'.

COMMISSIONING AND PROGRAMMING

Recommended commissioning procedure

Step 1: Re-fit the panel's PCBs and all connection leads by reversing the removal procedure detailed on page 6. Ensure all PCB retaining screws are firmly fastened down and the PSU earth distribution strap is connected to the base earth distribution post. If an optional network driver card is required, this should be fitted as shown on page 13.

Step 2: Check the continuity on the negative (-ve) line of the device loop to ensure it is fault free. **Note:** Loop isolators are in the positive (+ve) line, therefore continuity cannot be tested. Check the resistance of the conventional sounder circuits (if used) and all other field wiring to ensure they are fault free. **DO NOT MEGGER!** Remove all electronic devices if 500V testing is demanded.

Step 3: Connect all loop/field wiring to the Main Control PCB as detailed on pages 9 to 12.

Step 4: Connect the Mains supply cable to the L, N and Earth terminals on the Power Supply PCB (page 8) and the standby battery supply to the BAT1 terminals (page 12). Upon powering up, the panel's display will show a number of start-up messages detailing panel protocol, any faults, etc.

Step 5: Investigate any messages reported as faults on the panel's display.

Step 6: When all faults have been corrected, perform an auto address or loop learn at the panel.

All the loop devices connected to the panel need to have an address assigning to them. In addition, the panel needs to read all the fitted devices and identify their address.

There are two recommended options to do this:

Option 1 (AUTO ADDRESS): Enter Access Level 3 > COMMISSIONING FUNCTIONS > ADDRESS FUNCTIONS, select the AUTO ADDRESS menu option. This will automatically assign an address to each loop device in sequentially wired order. See page 25 for details.

Option 2 (LOOP LEARN): First, use a CAST Handheld Programmer (Part No. CAPROG) to manually assign an address to each loop device. Second, at Access Level 3 > COMMISSIONING FUNCTIONS, select the LOOP LEARN menu option. See page 23 for details.

Step 7: Rectify any problems resulting from the auto address or loop learn, e.g. double addresses, missing devices, etc. Note that a wide range of test and fault-finding functions are available in access level 3.

Step 8: After all faults have been cleared, carry out necessary panel tests.

Step 9: Proceed to program the panel using the panel's PC programming tools. This includes naming loop devices, naming zones and assigning devices to zones, groups and sets.

Step 10: When the panel has been programmed and tested and is working correctly, secure the panel lid and instruct the client/customer in the operation of the system. Handover all necessary manuals and other documentation before leaving site.

Access levels menu structure

Three access levels are available at the panel - access level 1 (general user), access level 2 (authorised user) and access level 3 (engineer). Fig.13 (see page 18) shows the menu options available at each level, all of which can be navigated using the panel's scroll (▲ ▼), Accept (▶) and Escape (◀) buttons.

This manual focuses on the functions available at access level 3 only, access levels 1 and 2 are covered in the separate user manual (Document No. DFU5020020) which includes information on how fire, fault, disablement and test conditions are reported and handled at the panel.

Fig.13 : CONTEXT PLUS CAST XFP 32 ZONE Menu Structure

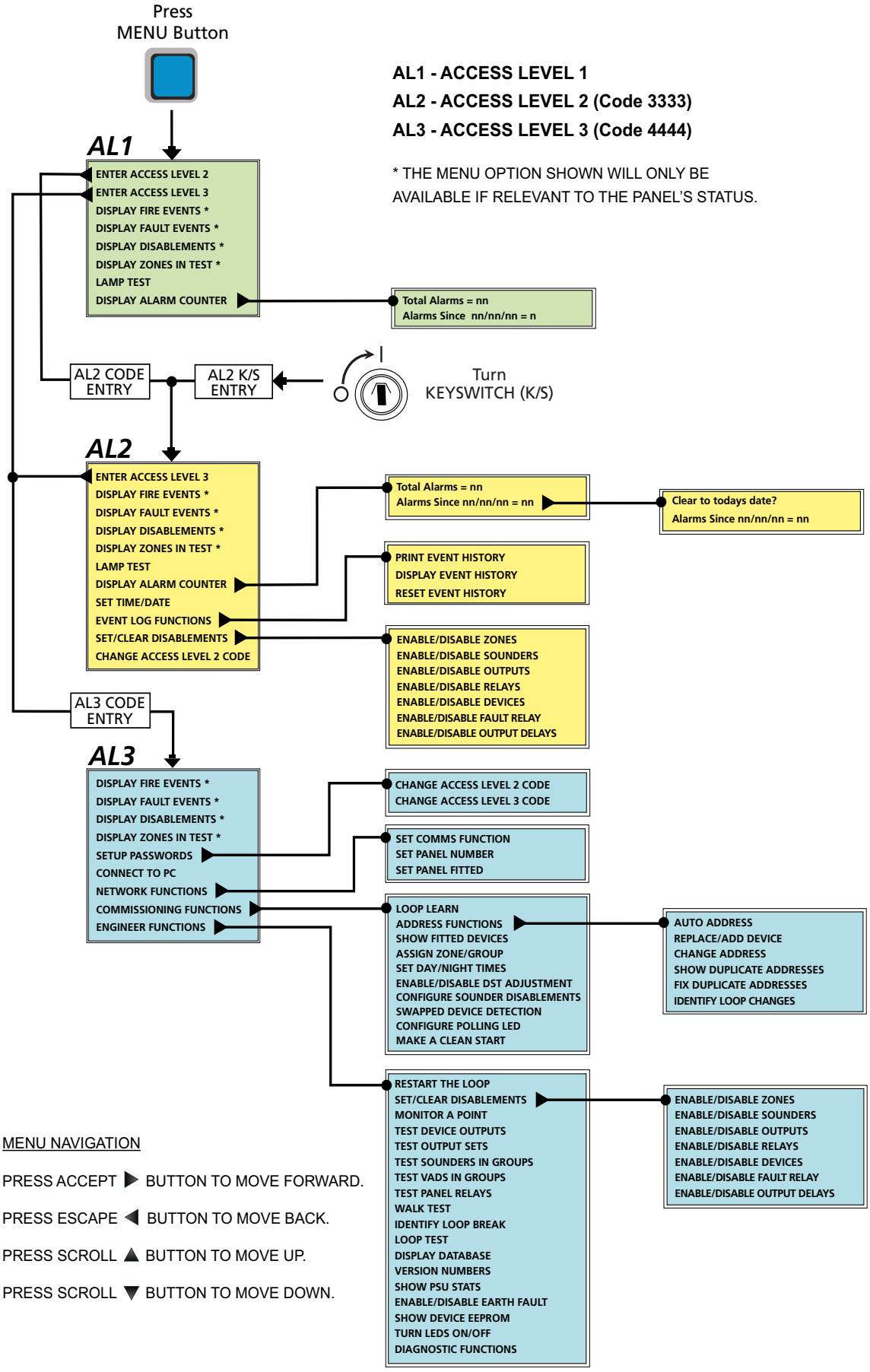

How to enter access level three

Access level 3 can be entered using two options:

Option 1: By pressing the Menu button, scrolling down to ENTER ACCESS LEVEL 3 menu and pressing the Accept ▸ button. The following prompt will appear:

Enter Access Level 3 code:

Enter the four-digit code using the ▲ (1) ▸ (2) ▼ (3) ◂ (4) buttons.

The default code is: **4 4 4 4** (four presses of the Escape ◂ button).

Option 2: By entering access level 2, selecting ENTER ACCESS LEVEL 3 menu and repeating the procedure above.

In access level 3, the panel's Silence/Resound Sounders, Control Panel Reset and Investigate buttons become active and you can:

- Scroll through any fire or fault conditions, disablements or zones in test
- Change the entry codes to access levels 2 and 3 from their factory default settings
- Connect the panel to a compatible PC for system programming
- Set the panel up to belong to a non-redundant network of eight CAST XFP main panels, or allow it to have up to eight XFP repeaters connected to it
- Gain access to a wide range of commissioning functions including AUTO ADDRESS & LOOP LEARN functions
- Gain access to a wide range of engineering, test and fault finding functions
- Display firmware version numbers and PSU statistics
- Set the time the panel enters/exits day (building occupied) and night (building unoccupied) mode
- Access the panel's access level 2 menu options as detailed in the panel's separate user manual (Document No. DFU5020020)

Fitting the panel's NVM link

To allow site-specific changes to be made to the panel's non-volatile memory (NVM), the NVM 'memory unlock' link **MUST** be fitted to the Main Control PCB. It is recommended that you fit this link as a matter of course whenever you are in access level 3.

NVM UNLOCK

REMEMBER TO RE-LOCK THE MEMORY (REMOVE THE LINK) WHEN PROGRAMMING IS COMPLETE.

Disabling the panel's internal sounder

Note: The disablement of the panel's internal sounder is non-compliant with EN54-2.

To disable the panel's internal sounder (active in fire & fault conditions), remove PLK5 link at the Main Control PCB.

Additional Main Control PCB Button/Links

RESET Button - Pressing this button will power down the panel and perform a panel reset and is only used if the panel has 'locked up'.

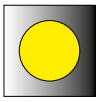

RESET

PLK1 - DO NOT REMOVE THIS LINK.

PLK4 - DO NOT REMOVE THIS LINK.

A detailed description of the functions available at access level 3 can be found below.

DISPLAY FIRE EVENTS

This function is only available if there are active fire conditions on the system.

Enter **AL3 (4444)** > **Display Fire Events.**

If available, press the Accept ▶ button and a window similar to the one below will appear:

```
Last Zone: 1:North Stairs          :Fire!
                                   1 Zone
```

Pressing the ▲ and ▼ buttons will scroll the display through all active fire conditions. More detailed information can be viewed by pressing the panel's More Information button.

DISPLAY FAULT EVENTS

This function is only available if there are active faults on the system.

Enter **AL3 (4444)** > **Display Fault Events.**

If available, press the Accept ▶ button and a window similar to the one below will appear:

```
Zone 1: Ground Floor
There are faults on this zone
```

Pressing the ▲ and ▼ buttons will scroll the display through all active faults. More detailed information can be viewed by pressing the panel's More Information button.

DISPLAY DISABLEMENTS

This function is only available when there are active disablements on the system.

Enter **AL3 (4444)** > **Display Disablements.**

If available, press the Accept ▶ button and a window similar to the one below will appear:

```
Zone 1: Shop floor
On: This Panel: Is Disabled
```

Pressing the ▲ and ▼ buttons will scroll the display through all active disablements.

DISPLAY ZONES IN TEST

This function is only available if one or more zones are being tested.

Enter **AL3 (4444)** > **Display Zones in Test.**

If available, press the Accept ▶ button and a window similar to the one below will appear:

```
Zone 1: North Stairs
Is On Test
```

Pressing the ▲ and ▼ buttons will scroll the display through all zones currently in test.

SETUP PASSWORDS

This function allows you to change the access codes required to enter the panel's access level 2 or 3 menu options.

Enter **AL3 (4444)** > **Setup Passwords.**

When selected, press the Accept ▶ button and the following window will appear:

```
CHANGE ACCESS LEVEL 2 CODE?
Change Access Level 3 code
```

Press the ▲ and ▼ buttons to scroll to the desired option and press the Accept ▶ button. The following message will appear if the CHANGE ACCESS LEVEL 2 CODE prompt is selected:

```
Enter NEW Access Level 2 code:
```

Using the ▲ (1) ▶ (2) ▼ (3) ◀ (4) buttons, enter the new four digit access level 2 code. After the fourth digit has been entered, the panel will request you confirm the new code by re-entering it.

```
Enter NEW Access Level 2 code:****
Confirm New Access Level 2 code:
```

Enter the code again by pressing the ▲ (1) ▶ (2) ▼ (3) ◀ (4) buttons in same sequence. If the two codes match, the new code will be accepted. If you type an incorrect confirmation code, you will be prompted to start the code entry sequence again. The same process can be used to change the access level 3 code.

BE SURE TO KEEP A RECORD OF ANY CHANGED CODES FOR FUTURE USE.

CONNECT TO PC

This function allows you to activate the panel's PC connection for system programming purposes. The panel's cause and effects programming, device and zone naming, zone dependency functions, etc., **MUST** be done using panel's PC programming tools (Part No. XFP507).

Enter **AL3 (4444)** > **Connect to PC.**

When the CONNECT TO PC prompt appears, press the Accept ▶ button. If all connections are correct, the following message will appear:

```
PC connected...
Press ESC to disconnect from PC
```

NETWORK FUNCTIONS (OPTIONAL)

Note: The CAST XFP network and XFP repeaters have not been assessed to EN54-2.

This menu function allows you to configure the panel to be part of a non-redundant network of up to eight CAST XFP main panels, OR allow it to have up to eight XFP repeaters connected to it. This option is only available if you have a network driver card fitted at the panel (see pages 13 & 14 for an overview of networking). The NETWORK FUNCTIONS menu has three options detailed below. Additional options are set using the panel's PC programming tools.

SET COMMS FUNCTION

This function **MUST** be used to set the panel's RS485 comms to operate in Network or Repeater mode.

Enter **AL3 (4444)** > **Network Functions** > **Set Comms Function.**

When selected, press the Accept ▶ button and a message similar to the one below will appear:

Comms is set for : Repeater	▶	Comms is set for : Network

Press the ▲ and ▼ buttons to scroll between Repeater and Network and press the Accept ▶ button.

SET PANEL NUMBER

If networking CAST XFP main panels, this function **MUST** be used to give each panel a unique ID number (1 to 8) so it can be recognised by other networked panels.

Note: Repeaters do not need to be assigned an ID number.

Enter **AL3 (4444)** > **Network Functions** > **Set Panel Number.**

When selected, press the Accept ▶ button and a message similar to the one below will appear:

Set Panel Number : 1

Press the ▲ and ▼ buttons to scroll to the desired network number (1 to 8, or No Network).

Fit the NVM link when requested and press the Accept ▶ button. Press Escape ◀ button x 5 and remove the NVM link.

SET PANEL FITTED

This function allows you to turn off the fault monitoring of non-redundant networked CAST XFP main panels. Typically, it is used if maintenance work is to be carried out at a networked panel to temporarily prevent integrity faults being flagged.

Enter **AL3 (4444)** > **Network Functions** > **Set Panel Fitted.**

When selected, press the Accept ▶ button and fit the NVM link when requested,

Use the and scroll ▲ button to select a panel number and press Accept ▶ button. A message similar to the one below will appear:

Network Panel : 1	▶	Network Panel : 1 Not Fitted

Press the ▲ and ▼ and Accept ▶ buttons to select a panel as 'Not Fitted'.

Press Escape ◀ button x 5 and remove the NVM link.

REMEMBER TO REVERSE THIS FUNCTION WHEN MAINTENANCE WORK IS COMPLETE.

COMMISSIONING FUNCTIONS

Selecting this menu option takes you to the COMMISSIONING FUNCTIONS menu. As a rule, pressing the Escape ◀ button when in a submenu will return you to the COMMISSIONING FUNCTIONS menu. Note that the majority of system commissioning - cause and effects programming, device and zone naming, etc. **MUST** be done using the panel's PC programming tools (Part No. XFP507).

LOOP LEARN

NB! LOOP LEARN WILL NOT AUTO ADDRESS DEVICES. Loop learn is only for pre-addressed devices, e.g. using the CAPROG handheld programmer.

An alternative function to Loop Learn is the AUTO ADDRESS menu option. See page 25 for details.

During a loop learn, the panel interrogates every pre-addressed device on the loop to see if an addressable unit is present and, if so, find out what type of device it is.

Enter **AL3 (4444) > Commissioning Functions > Loop Learn.**

When the LOOP LEARN prompt appears, press the Accept ▶ button to continue.

Press the scroll ▲ button to select 'Yes' then press the Accept ▶ button shown below:

Continue with Loop Learn? No	▶	Continue with Loop Learn? Yes

Select which loop(s) to learn: **ALL, 1 or 2** using the scroll ▲ button then press the Accept ▶ button.

When requested by the panel fit the NVM link shown below:

```
Please fit the NVM Link now
or press ESCape to abort
```

As the panel may already have loop device data stored in its memory from a previous loop learn or PC upload, you will be asked if you want to erase this information before the loop learn begins.

Note: Loop 1 has been selected in the following examples.

You now have two options: 'Erase Loop 1 device data first? No', or 'Erase Loop 1 device data first? Yes', as detailed below:

Option 1: Select 'Erase Loop 1 device data first? No'

Use this option if you do not want to erase the stored loop device data. The panel will learn the loop without overwriting existing data, e.g. zone and group allocation, device names, etc., which will remain unchanged. The only data that will be overwritten is device type and whether or not it is fitted.

Press the scroll ▲ button to select 'No' then press the Accept ▶ button shown below.

```
Erase Loop 1 device data first? No
```

The panel will start a loop learn. Wait for the process to complete and a summary window will appear, similar to the one shown below:

```
112 Devices Found
Auto learn complete, Press Accept
```

Press the Accept ▶ button then press Escape ◀ button x 3 to return the panel to a normal condition. When requested by the panel remove the NVM link shown below:

```
6: 50        16 Jan : Normal
Remove the NVM Un-Lock link
```

Option 2: Select 'Erase Loop 1 device data first? Yes'

CAUTION: USING THIS OPTION WILL COMPLETELY ERASE THE PANEL'S DATABASE OF STORED LOOP DEVICE INFORMATION EXCLUDING DEVICE ADDRESSES PREVIOUSLY ASSIGNED BY A CAPROG PROGRAMMER, WHICH IS RETAINED. THIS IS DIFFERENT TO THE AUTO ADDRESS FUNCTION. USE THIS OPTION WITH EXTREME CARE.

Use this option if the panel has not previously been programmed, or if you want to program an existing system as if it were a new system.

Press the scroll ▲ button to select 'Yes' then press the Accept ▶ button shown below:

```
Erase loop 1 device data first? Yes
```

The following two options will now be available:

```
Are you sure you want to erase
the Database? No
```

▶

```
Are you sure you want to erase
the Database? Yes
```

To select 'No', press the Accept ▶ button, the panel will start a loop learn without erasing the database.

Only if you are confident to proceed, press the scroll ▲ button to select 'Yes', then press the Accept ▶ button. The panel will erase its database, update its flash memory and start a loop learn. Wait for the process to complete and a summary window will appear, similar to the one shown below:

```
112 Devices Found
Auto learn complete, Press Accept
```

Press the Accept ▶ button then press Escape ◀ button x 3 to return the panel to a normal condition. When requested by the panel remove the NVM link shown below:

```
6: 50          16 Jan : Normal
Remove the NVM Un-Lock link
```

AFTER A SUCCESSFUL LOOP LEARN, YOU WILL HAVE A 'ONE OUT, ALL OUT' FIRE ALARM SYSTEM. See Table 1 below for the default device assignment following a loop learn.

DEVICE	DEFAULT ASSIGNMENT
Loop Smoke/Heat/Multi-Detectors	Zone 1
Loop Manual Call Points	Zone 1
Loop I/O Unit Inputs	Zone 1
Loop I/O Unit Outputs	Set 1
Loop Sounders/VADs	Group 1
Panel Conv. Sounder Circuit 1	Group 1
Panel Conv. Sounder Circuit 2	Group 2

Table 1 : Default Device Assignment

Assignment Terms:

Input devices such as detectors, manual call points and the input channels of I/O units are programmed to be members of a **Zone**.
Output devices such as loop powered sounders, sounder control units and the panel's conventional sounder circuits are programmed to be members of a **Group**.
The output channels of I/O units and the panel's relays are programmed to be members of a **Set**.
Default Cause & Effects (C&E): Zone 1 triggers Group 1 and Set 1.
Classifying input and output devices in this manner greatly simplifies cause & effects programming.

ADDRESS FUNCTIONS

Selecting this menu option takes you to the ADDRESS FUNCTIONS menu which allows you to perform an auto address, replace/add a loop device, change an address, show/fix duplicate addresses and identify changes to the loop.

AUTO ADDRESS

An alternative function to Auto Address is the LOOP LEARN menu option. See page 23 for details.

During an auto address the panel automatically assigns an address to each loop device in sequentially wired order.

Enter **AL3 (4444) > Commissioning Functions > Address Functions > Auto Address.**

When the AUTO ADDRESS prompt appears, press the Accept ▶ button to continue.

Press the scroll ▲ button to select 'Yes' then press the Accept ▶ button shown below:

Continue with Loop Learn? No The Database will be erased	▶	Continue with Loop Learn? Yes The Database will be erased

Select which loop(s) to auto address: **ALL, 1 or 2** using the scroll ▲ button then press the Accept ▶ button, shown below:

Loop Learn : ALL	▶	Loop Learn : 1	▶	Loop Learn : 2

When requested by the panel fit the NVM link shown below:

Please fit the NVM Link now or press ESCape to abort

Note: Loop 1 has been selected in the following examples.

You now have two options: 'Continue from last address? No', or 'Continue from last address? Yes', as detailed below:

Option 1: Select 'Continue from last address? No'

CAUTION: USING THIS OPTION WILL COMPLETELY ERASE THE PANEL'S DATABASE OF STORED LOOP DEVICE INFORMATION INCLUDING ERASING ALL EXISTING DEVICE ADDRESSES AND DEVICE ADDRESSES ASSIGNED BY A CAPROG PROGRAMMER. THIS IS DIFFERENT TO THE LOOP LEARN FUNCTION. USE THIS OPTION WITH EXTREME CARE.

Use this option if the panel has not previously been programmed, or if you want to program an existing system as if it were a new system, and you are confident to proceed.
Press the scroll ▲ button to select 'No' then press the Accept ▶ button shown below:

Continue from last address? No

The panel will perform an auto address. Wait for the process to complete and a brief summary window will appear, similar to the one shown below:

```
112 Devices Found
Auto learn complete, Press Accept
```

Press the Accept ▶ button then press Escape ◀ button x 4 to return the panel to a normal condition.

When requested by the panel remove the NVM link shown below:

```
6: 50        16 Jan : Normal
Remove the NVM Un-Lock link
```

AFTER A SUCCESSFUL AUTO ADDRESS, YOU WILL HAVE A 'ONE OUT, ALL OUT' FIRE ALARM SYSTEM. See Table 1, page 24 for the default device assignment following an auto address.

Option 2: Select 'Continue from last address? Yes'

Use this option if you do not want to erase the stored loop device data. The panel will start to learn the loop from the last known address in its memory. Existing data will not be overwritten, e.g. zone and group allocation, device names, etc., will remain unchanged. The only data that will be overwritten is device type and whether or not it is fitted.

Press the scroll ▲ button to select 'Yes' then press the Accept ▶ button shown below:

```
Continue from last address? Yes
```

The panel will perform an auto address. Wait for the process to complete and a brief summary window will appear, similar to the one shown below:

```
112 Devices Found
Auto learn complete, Press Accept
```

Press the Accept ▶ button then press Escape ◀ button x 4 to return the panel to a normal condition.

When requested by the panel remove the NVM link shown below:

```
6: 50        16 Jan : Normal
Remove the NVM Un-Lock link
```

REPLACE/ADD DEVICE

This function may be used, for example, to replace a faulty loop device, or add a new loop device.

NB: THIS MENU OPTION HAS TO BE SELECTED BEFORE A LOOP DEVICE IS REPLACED OR ADDED.

Enter **AL3 (4444) > Commissioning Functions > Address Functions > Replace/Add Device.**

When the REPLACE/ADD DEVICE prompt is displayed press the Accept ▶ button.

Select which loop (1 or 2) to replace or add a device using the using the scroll ▲ button then press the Accept ▶ button.

Note: Loop 1 has been selected in the following example.

```
Loop : 1
```

Select the device address using the ▲ and ▼ scroll buttons, as shown below:

```
Loop : 1   Device : 10
```

Press the Accept ▶ button and the following display appears:

```
Loop : 1   Device : 10
Waiting for device
```

Note: If you do not want to proceed at this point, you may exit this function by pressing the Escape ◀ button.

Replace or add the selected loop device.

The panel will now auto-address the new device as address 10.

Press the Escape ◀ button x 3 and the panel will perform a learning process.

When requested by the panel fit the NVM link shown below:

```
Please fit the NVM Link now
```

The panel perform a loop learn and the following summary is displayed:

```
112 Devices Found
Auto learn complete, Press Accept
```

Press Accept ▶ button and Escape ◀ button. Remove the NVM link when requested by the panel.

```
Remove NVM Un-Lock Link
```

CHANGE ADDRESS

This function is used to change device addresses at the panel, therefore saving the use of ladders to access a device on site.

Note: The CAPROG Handheld Programmer can be used to manually change the address of a device, but this will also require a loop learn to be carried out.

Enter **AL3 (4444)** > **Commissioning Functions** > **Address Functions** > **Change Address.**

When the CHANGE ADDRESS prompt is displayed press the Accept ▶ button.

Select which loop (1 or 2) to change an address using the scroll ▲ button then press the Accept ▶ button.

Note: Loop 1 has been selected in the following example and the following is displayed:

```
Loop :  1
```

▶

```
Old Address:  1
```

Enter the address you want to change using the ▲ and ▼ scroll buttons then press the Accept ▶ button. The device's LED will light and the following is displayed, for example 'Device 8'.

```
Loop : 1   Device : 8
New Address : 8
```

Enter the new address of the device using the ▲ and ▼ scroll buttons, for example 'Device 9', then press the Accept ▶ button.

```
Loop : 1   Device : 8
New Address : 9
```

In this example the panel will auto-assign address 8 to address 9.

When requested by the panel fit the NVM link shown below:

```
Please fit the NVM Link now
```

Wait until the old address is flashing, address 8 is shown below.

```
Old Address:  '8'
```

Press Escape ◀ button x 4. The panel will re-learn and a brief summary window will appear, similar to the one shown below:

```
112 Devices Found
Auto learn complete, Press Accept
```

Press the Accept ▶ button then press Escape ◀ button to return the panel to a normal condition.

When requested by the panel remove the NVM link shown below:

```
6: 50          16 Jan : Normal
Remove the NVM Un-Lock link
```

SHOW DUPLICATE ADDRESSES

This function helps to locate devices with duplicate (double) addresses by activating their device (polling) LEDs.

If there is a duplicate address a fault may have been displayed at the panel stating, 'Loop configuration has changed on Loop 1', 'There are faults on this zone'.

Press More Information button, then press the ▲ and ▼ scroll buttons to view additional information on the fault.

To show light the LEDs of the duplicate addresses enter:
AL3 (4444) > Commissioning Functions > Address Functions > Show Duplicate Addresses.

When the SHOW DUPLICATE DEVICES prompt is displayed press the Accept ▶ button and details of the double address will appear, for example:

```
Loop: 1      Device 8 : Duplicate Address
Turn ON device LED?
```

Press the Accept ▶ button and the LEDs of the devices with duplicate addresses will be lit steady red.

To fix the duplicate address at the panel, press Escape ◀ button and go to FIX DUPLICATE ADDRESS function (see page 30).

To switch off the device LEDs, press the Accept ▶ button again as shown below.

```
Loop: 1      Device 8 : Duplicate Address
Turn OFF device LED?
```

FIX DUPLICATE ADDRESSES

This function helps to locate and fix devices with duplicate (double) addresses and also activates device (polling) LEDs.

If there is a duplicate address a fault may have been displayed at the panel, e.g. 'There are faults on this zone' (see right).

```
Zone  1: Kitchen
There are faults on this zone
```

Enter **AL3 (4444) > Commissioning Functions > Address Functions > Fix Duplicate Addresses.**

When FIX DUPLICATE ADDRESS prompt is accepted, select Loop 1 or 2 and press the Accept ▶ button.

The panel will re-initialise and check the loop. Wait for the re-initialise process to finish.

Press the Menu button and the LED of the first duplicate address will be lit steady red, also details of the first duplicate address found will appear, for example:

```
Loop: 1      Device: 8
New Address: 3 [DUPLICATE?]
```

The panel will suggest a new address for the duplicate device. Press the Accept ▶ button to change to the new address, or press scroll ▲ and ▼ buttons and Accept ▶ button to select the new address.

The LED of the second duplicate address will now be lit steady red, also details of the second duplicate address found will appear. The panel will display the following, for example:

```
Loop: 1      Device: 10
New Address: 8   [ORIGINAL]
```

The panel will suggest a new address for the original device. Press the Accept ▶ button to change to the new address, or press scroll ▲ and ▼ buttons and Accept ▶ button to select a new address.

The panel will confirm there are no duplicate addresses on the loop shown below:

```
No Duplicate Addresses on the Loop
```

Press Escape ◀ button x 3 and the panel will force a loop learn on exiting access level 3. Wait for the loop learn to finish.

When requested by the panel fit the NVM link shown below:

```
Please fit the NVM Link now
```

The typical display shown below will appear:

```
9 Devices Found
Auto learn complete, Press Accept
```

Press Accept ▶ button and Escape ◀ button. Remove the NVM link when requested by the panel:

```
Remove NVM Un-Lock Link
```

IDENTIFY LOOP CHANGES

Note: If this function is used to identify swapped loop devices then ensure the 'SWAPPED DEVICE DETECTION' mode Is Enabled. See Page 33 for details.

This function helps to locate, for example, swapped loop devices, any new devices, loop configuration changes, etc. A fault may have been displayed at the panel stating 'Loop Configuration Changed on Loop 1', or 'There are faults on this Zone'.

Enter **AL3 (4444)** > **Commissioning Functions** > **Address Functions** > **Identify Loop Changes.**

When the IDENTIFY LOOP CHANGES prompt is displayed, press the scroll ▲ , ▼ buttons and Accept ▶ button to select the loop (1 or 2) and the panel will re-initialise and check the loop.

In this example, the panel will light the LED of the 1st swapped device, for example:

```
Zone : 1     Loop : 1     Device : 1
Changed device found, LED is ON
```

Press the scroll ▲ ▼ buttons and the panel will light the LED of the 2nd swapped device (the LED on the 1st device will turn off), for example:

```
Zone : 1     Loop : 1     Device : 3
Changed device found, LED is ON
```

Continue to press the scroll ▲ ▼ buttons and the panel will light the LED of further swapped devices.

Once all swapped devices have been identified, changeover the devices to their correct loop position.

Enter **AL3 (4444)** > **Engineer Functions** > **Restart the Loop.**

When selected, press the Accept ▶ button, select the loop and a window similar to the one below will appear:

```
Restarting loop...
```

The panel will automatically re-initialise the loop and fault will be removed.

SHOW FITTED DEVICES

This function lists all the addressable devices stored in the panel's memory. It DOES NOT give a list of what is fitted on the loop at the exact time the function is selected, i.e. unlearnt devices will not be displayed but faulty or missing devices will.

Enter **AL3 (4444)** > **Commissioning Functions** > **Show Fitted Devices.**

When the SHOW FITTED DEVICES prompt appears, press the Accept ▶ button.

Select either Loop 1 or 2 using the using the scroll ▲ button then press the Accept ▶ button.

Note: Loop 1 has been selected in the following example and the following is displayed:

```
L:1    D: 1   SMCCOODCSD    10
L:1    D: 11  ZCSHHDDMMC    20
```

Devices are displayed in groups of 10. In the example above, the top line shows the type of devices fitted at addresses 1 to 10 on loop 1 and the second line shows the type of devices fitted at addresses 11 to 20.

The following letters displayed are dependent on the type of device at that address location:

C = Manual Call Point	M = I/O Unit	Z = I/O Zone Monitor
O = Optical Detector	S = Sounder	! = Double Addressed
H = Heat Detector	D = Multi-Detector	? = Unknown

To view the remaining devices on the loop, press the ▲ and ▼ buttons to scroll. To exit press the Escape ◀ button.

ASSIGN ZONE/GROUP

This function allows you to assign devices to be members of detector zones or sounder groups. This would normally be done using the panel's PC programming tools but is provided at the panel to get it working in a basic manner before it is properly configured at a later date.

Enter **AL3 (4444)** > **Commissioning Functions** > **Assign Zone/Group.**

When selected, fit the NVM link, press the scroll ▲ , ▼ buttons and Accept ▶ button to select the loop (1 or 2) and device address. You will then be shown the zone/group assignment window, for example:

```
Zone :  Loop: 1          Device: 3
Belongs to Zone:- 1
```

Press the ▲ & ▼ buttons to scroll to the desired zone or group and press the Accept ▶ button.

The assignment will be made and you will be prompted to select another loop/device to assign using the same procedure. To exit press Escape ◀ button x 4 and remove the NVM link when prompted.

Note: Although I/O units can be assigned to be members of zones using this menu, this only applies to their input function. The panel's PC programming tools **MUST** be used to assign them to output sets.

SET DAY/NIGHT TIMES

This function allows the user to alter the time the panel enters day (building occupied) and night (building unoccupied) mode. **IT IS RECOMMEND YOU DO NOT USE THIS FUNCTION UNLESS YOU ARE VERY KNOWLEDGEABLE ABOUT THE OPERATION OF THE FIRE ALARM SYSTEM**.

Changes that may occur when the panel is in day/night mode include detector sensitivities, cause and effects and sounder volumes. These changes **MUST** be done using the panel's PC programming tools.

Enter **AL3 (4444)** > **Commissioning Functions** > **Set Day/Night Times.**

When the SET/DAY NIGHT TIMES prompt appears, press the Accept ▶ button and the following window (or similar) will appear:

```
Day (Occupied) mode begins:  6: 0
```

Press the scroll ▲ and ▼ buttons and Accept ▶ button to set the time in hours and minutes that you want the panel to enter day mode (the panel has a 24 hour clock).

When the desired time is displayed, press the Accept ▶ button to access the night mode entry field.

A window similar to the one below will appear:

```
Day (Occupied) mode begins:  6: 0
Night (Un-Occupied) mode begins:  18: 0
```

Press the scroll ▲ ▼ buttons and Accept ▶ button to set the time in hours and minutes that you want the panel to enter night mode. When the desired time is displayed, press the Accept ▶ button to select.

ENABLE/DISABLE DST ADJUSTMENT

This function (when enabled) allows you to programme the panel's DST (Daylight Saving Time) so it automatically goes forward one hour on the last Sunday in March and goes back one hour on the first Sunday in October:

Enter **AL3 (4444) > Commissioning Functions > Enable/Disable DST Adjustment.**

When the ENABLE/DISABLE DST ADJUSTMENT prompt appears, press the Accept ▶ button and the following window (or similar) will appear:

Auto DST Time Adjustment is : Enabled

Press the ▲ and ▼ buttons to scroll between 'Enabled' and 'Disabled' and Accept ▶ to button select the option.

CONFIGURE SOUNDER DISABLEMENTS

Note: The disablement of individual sounder groups is non-compliant with EN54-2.

Note: Changes to this menu option will affect the ENABLE/DISABLE SOUNDERS menu option, see page 36.

This function configures the sounder groups (1 to 16) to be 'Globally' or 'Individually' disabled or enabled.

Enter **AL3 (4444) > Commissioning Functions > Configure Sounder Disablements.**

When accepted, two windows 'Globally' and 'Individually' are available by pressing the ▲ and ▼ scroll buttons:

Sounder Groups can be Disabled/Enabled Globally	▶	Sounder Groups can be Disabled/Enabled Individually

Press Accept ▶ button to make a selection.

SWAPPED DEVICE DETECTION

Note: This function is only used to enable the 'SWAPPED DEVICE DETECTION' mode. Once this mode is enabled enter 'IDENTIFY LOOP CHANGES' function to identify the swapped devices. See page 31 for details.

This function allows you to detect swapped loop devices. A fault may have been displayed at the panel stating 'Loop Configuration Changed on Loop 1' or 'There are Faults on this Zone'.

First ensure the 'SWAPPED DEVICE DETECTION' function is enabled by performing the following procedure.

Enter **AL3 (4444) > Commissioning Functions > Swapped Device Detection.**

When the SWAPPED DEVICE DETECTION prompt is displayed, press Accept ▶ button . The panel will display the following window:

Enable Swapped Device Detection? No

Press the scroll ▲ button to select 'Yes'.

Enable Swapped Device Detection? Yes

Press the Accept ▶ button.

When requested by the panel fit the NVM link shown below:

Please fit the NVM Link now or press ESCape to abort

The panel will update its flash database. Press Escape ◀ button x 3. Remove the NVM link when requested by the panel.

Remove NVM Un-Lock Link

To continue, access the IDENTIFY LOOP CHANGES function, see page 31 for details.

CONFIGURE POLLING LED

This function configures the polling (device) LEDs of all loop devices to globally stop flashing during normal polling. For example, a customer may require polling LEDs to be turned off in a hotel.

Enter **AL3 (4444)** > **Commissioning Functions** > **Configure Polling LED.**

When accepted, the following window will appear:

Blinking LEDs are : Enabled

Press the ▲ and ▼ buttons to scroll between 'Enabled' and 'Disabled', then press Accept ▶ button to select.

When requested fit the NVM Link. The panel will update the flash database and configure the loop devices.

Press Escape ◀ button x 3. When requested remove the NVM link.

MAKE A CLEAN START

CAUTION: USING THIS FUNCTION WILL COMPLETELY ERASE THE PANEL'S DATABASE OF STORED INFORMATION. THEREFORE, USE THIS FUNCTION WITH EXTREME CARE.

This function allows you to clear the panel's memory back to its factory default settings. Only if you are confident to proceed, enter the five-digit confirmation code.

Note: The button sequence has to be entered VERY QUICKLY to avoid accidentally erasing panel data.

Enter **AL3 (4444)** > **Commissioning Functions** > **Make a Clean Start.**

Enter confirmation code:

The button sequence is: ▲ **(1)**, ▶ **(2)**, ▼ **(3)**, ◀ **(4)**, **Silence Internal Sounder** button.

When requested fit the NVM Link. The panel will erase its record and update the flash database.

Press Escape ◀ button x 3 and when requested remove the NVM link.

ENGINEER FUNCTIONS

Selecting this menu option takes you to the ENGINEER FUNCTIONS menu. As a rule, pressing the Escape ◀ button when in a submenu will return you to the ENGINEER FUNCTIONS menu.

RESTART THE LOOP

This function may be used, for example, if there is a problem with a missing device, or a device not closing its s/c isolator.

Enter **AL3 (4444)** > **Engineer Functions** > **Restart the Loop.**

When selected, select the loop to restart (All, 1 or 2) using the ▲ and ▼ scroll buttons and press the Accept ▶ button. A window similar to the one below will appear:

```
Restarting loop...
```

The panel will power down the loop, re-initialize the loop devices and automatically return to the ENGINEER FUNCTIONS menu.

SET/CLEAR DISABLEMENTS

Selecting this menu option takes you to the disablements submenu which allows you to enable/disable zones, sounders, outputs, relays, loop devices, the panel's fault relay and output delays.

Any disablement(s) will be indicated at all access levels via the DISPLAY DISABLEMENTS menu option and the General Disablement LED on the front of the panel.

CAUTION: IT IS STRONGLY RECOMMENDED THAT ALL DISABLEMENTS ARE REGULARLY REVIEWED AND IMMEDIATELY ENABLED WHEN NO LONGER NECESSARY AS THEY CAN HAVE A MAJOR AFFECT ON HOW THE SYSTEM WORKS.

ENABLE/DISABLE ZONES

This function allows you to disable zones from reporting faults, fires, etc., and may be used to temporarily disable a zone of devices in areas such as loading bays that are prone to nuisance triggering from vehicle fumes.

Enter **AL3 (4444)** > **Engineer Functions** > **Set/Clear Disablements** > **Enable/Disable Zones.**

When selected, press the Accept ▶ button and a window similar to below will appear:

```
Zone: 1: Loading Bay
Enabled
```

Select the zone to be disabled/enabled using the ▲ and ▼ scroll buttons, then press the Accept ▶ button and the zone's status (Enabled or Disabled) will flash. Next, press the ▲ and ▼ scroll buttons to toggle between enabled and disabled and press the Accept ▶ button to select. The window will now move to the next available zone allowing further enablements or disablements to be made. Alternatively, to return to the previous menu press the Escape ◀ button.

Note: If all input devices on a zone have been disabled using the ENABLE/DISABLE DEVICES function detailed on page 37, the zone they belong to will also be disabled. If you try to re-enable a zone which has no enabled devices on it, a prompt appears saying this cannot be done. Instead you **MUST** enable at least one device on the zone using the ENABLE/DISABLE DEVICES function before re-enabling the zone itself.

ENABLE/DISABLE SOUNDERS

Note: The disablement of individual sounder groups is non-compliant with EN54-2.

Note: Changes made to the CONFIGURE SOUNDER DISABLEMENTS function, see page 33, will have an affect on the options available at this menu.

This function allows you to disable one or more sounder groups from sounding in a fire condition.

Enter **AL3 (4444)** > **Engineer Functions** > **Set/Clear Disablements** > **Enable/Disable Sounders.**

When selected, press the Accept ▶ button and windows similar to the ones below will appear:

Sounder Group: All	▶	Sounder Group: All Enabled

Select the sounder group (1 to 16 or ALL) to be disabled/enabled using the ▲ and ▼ scroll buttons.

When the desired sounder group has been selected, press the Accept ▶ button and the sounder group's status (Enabled or Disabled) will flash. Next, press the ▲ and ▼ scroll buttons to toggle between enabled and disabled and press the Accept ▶ button to select. The window will now move to the next sounder group allowing further enablements or disablements to be made. Alternatively, to return to the previous menu press the Escape ◀ button.

ENABLE/DISABLE OUTPUTS

This function allows you to disable one or more output sets from activating in a fire condition. It is typically used to disable, for example, auto-diallers to monitoring stations, roller shutter doors, etc. from activating during routine maintenance.

Enter **AL3 (4444)** > **Engineer Functions** > **Set/Clear Disablements** > **Enable/Disable Outputs.**

When selected, press the Accept ▶ button and windows similar to the ones below will appear:

Output Set: All	▶	Output Set: All Enabled

Select the output set (1 to 16 or ALL) to be disabled/enabled using the ▲ and ▼ scroll buttons.

When the desired output set has been selected, press the Accept ▶ button and the output set's status (Enabled or Disabled) will flash. Next, press the ▲ and ▼ scroll buttons to toggle between enabled and disabled and press the Accept ▶ button to select. The window will now move to the next output set allowing further enablements or disablements to be made. Alternatively, to return to the previous menu press the Escape ◀ button.

ENABLE/DISABLE RELAYS

This function allows the disablement of one or more of the panel's 3 auxiliary relays from activating as programmed.

Enter **AL3 (4444)** > **Engineer Functions** > **Set/Clear Disablements** > **Enable/Disable Relays.**

When selected, press Accept ▶ button and windows similar to the ones below will appear:

Panel Relay : 1	▶	Panel Relay : 1 Enabled

Select the relay (1, 2 or 3) to be disabled/enabled using the ▲ and ▼ scroll buttons.

When the desired output set has been selected, press the Accept ▶ button and the relay's status (Enabled or Disabled) will flash. Next, press the ▲ and ▼ scroll buttons to toggle between enabled and disabled and press the Accept ▶ button to select. The window will now move to the next relay allowing further enablements or disablements to be made. Alternatively, to return to the previous menu press the Escape ◀ button.

ENABLE/DISABLE DEVICES

This function allows loop devices to be disabled from reporting faults, fires, etc., and is normally used to temporarily disable detectors/call points that are nuisance tripping.

Enter **AL3 (4444)** > **Engineer Functions** > **Set/Clear Disablements** > **Enable/Disable Devices.**

When selected, press the Accept ▶ button and a window similar to the one below will appear:

```
Loop : 1
```

Press the ▲ and ▼ scroll buttons and Accept ▶ buttons to select the loop (1 or 2) and range of devices. When selected, the following display will appear, for example:

```
Loop : 1     From : 1  to  5
Enabled
```

Press the ▲ and ▼ scroll buttons to toggle between enabled and disabled, then press the Accept ▶ button to select.

Note: If all input devices on a zone have been disabled, the zone they belong to will also be disabled. If you try to re-enable a zone which has no enabled devices on it using the ENABLE/DISABLE ZONES function described on page 35, a prompt appears saying this cannot be done. Instead you **MUST** enable at least one device on the zone before re-enabling the zone itself.

ENABLE/DISABLE FAULT RELAY

This function can be used to suppress the panel's single, fault relay output from activating in a fault condition.

Enter **AL3 (4444)** > **Engineer Functions** > **Set/Clear Disablements** > **Enable/Disable Fault Relay.**

When selected, press the Accept ▶ button and the following window will appear:

```
Fault Relay output is :
Enabled
```

Press the ▲ and ▼ scroll buttons to toggle between enabled and disabled and press the Accept ▶ button to select the desired option. Alternatively, to return to the previous menu press the Escape ◀ button.

ENABLE/DISABLE OUTPUT DELAYS

This function can be used to globally enable (TURN ON) or disable (TURN OFF) any delays to outputs that have been programmed by an engineer.

Enter **AL3 (4444)** > **Engineer Functions** > **Set/Clear Disablements** > **Enable/Disable Output Delays.**

When selected, press the Accept ▶ button and the following will appear:

```
Delays to Outputs are :
Enabled
```

Press the ▲ and ▼ scroll buttons to toggle between enabled and disabled and press the Accept ▶ button to select the desired option. Alternatively, to return to the previous menu press the Escape ◀ button.

MONITOR A POINT

This function allows you to view the current analogue status of any point (any addressable device on the system).

Enter **AL3 (4444)** > **Engineer Functions** > **Monitor a Point.**

When selected, choose the loop number (1 or 2), press Accept ▶ button to continue then press the ▲, ▼ and Accept ▶ buttons to select the device's address.

The panel will <u>temporarily disable</u> the point in question and return back its analogue values, for example:

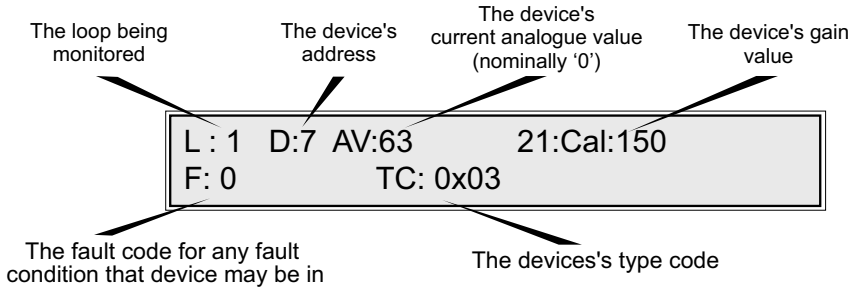

Note 1: The analogue values returned will differ dependent on whether the device is a detector, manual call point, I/O unit or sounder.

Note 2: The information displayed will assist Technical Support to identify the cause of any problems.

TEST DEVICE OUTPUTS

This function allows you to assert the output(s) of an addressable device to check it is working correctly. It can be used, for example, to assert a detector's LED, or to check that an I/O unit is functioning correctly. Addressable devices typically may have up to three output channels (LED, Sounder and VAD), the functions of which depend upon its type, e.g. detector, sounder, manual call point, or I/O unit.

CAUTION: OUTPUT CHANNELS ON AN I/O UNIT MAY BE PROGRAMMED TO TRIGGER SAY, A WATER EXTINGUISHANT SYSTEM. THIS FUNCTION MUST BE USED WITH EXTREME CARE.

Enter **AL3 (4444)** > **Engineer Functions** > **Test Device Outputs.**

When selected, you will be prompted to enter the loop (1 or 2), device's address and the relevant output:

```
Loop : 1  Device : 1
Output Bit Value: NONE
```

Press the ▲, ▼ scroll buttons and Accept ▶ button to select the device address and output bit value. (as detailed in the table below).

OUTPUT CHANNELS ASSERTED
None
LED
Sounder
LED & Sounder
VAD
LED & VAD
Sounder & VAD
LED & Sounder & VAD

IF YOU ACTIVATE THE OUTPUTS ON MULTIPLE DEVICES AND THEN EXIT THIS FUNCTION ONLY THE OUTPUTS ON THE LAST DEVICE SELECTED WILL AUTO DEACTIVATE. THE REMAINING OUTPUTS ON WILL STAY ON. THEREFORE, ENSURE THAT ALL OUTPUTS ARE DE-ACTIVATED BEFORE EXITING THIS FUNCTION.

When you have accepted the required output bit option, the panel will confirm your selection and the device's output channels will be asserted. If desired, you can now select alternative outputs using the ▲ and ▼ scroll buttons.

To exit this function press the Escape ◀ button x 2. The panel will ask for confirmation to reset the outputs to their normal settings as shown below:

```
Reset the Outputs?
```

Press Accept ▶ button to reset the outputs, or Escape ◀ button maintain the settings.

TEST OUTPUT SETS

This function allows you to test one, or all of the system's output sets by altering their state from Normal to Triggered.

Enter **AL3 (4444)** > **Engineer Functions** > **Test Output Sets.**

When the TEST OUTPUT SETS prompt appears, press the Accept ▶ button and the output set selection window will appear.

```
Output Set : 1
```

Press the ▲ and ▼ buttons to select the output set you would like to test (1 to 16 or ALL). Press the Accept ▶ button and the following window will appear:

```
Output Set : 1 is Normal
Change the state using the Accept button
```

Press the Accept ▶ button and the selected output set will change state from normal to triggered.

```
Output Set : 1 is Triggered
Change the state using the Accept button
```

To test additional output sets, press the ▲ and ▼ and Accept ▶ button to change the output set's number and state.

Finally, press the Escape ◀ button.

When exiting this function the panel will ask for confirmation to reset the outputs to their normal settings. **Select Accept ▶ button to reset, or Escape ◀ button maintain the settings**.

TEST SOUNDERS IN GROUPS

This function allows you to test one, or all of the system's sounder groups by altering their state between Silenced, Intermittent and Continuous.

Enter **AL3 (4444)** > **Engineer Functions** > **Test Sounders in Groups.**

When the TEST SOUNDERS IN GROUPS prompt appears, press the Accept ▶ button and the group selection window will appear:

```
Sounder Group  :  1
```

Press the ▲ and ▼ scroll buttons to select the sounder group you would like to test (1 to 16 or ALL). Press the Accept ▶ button and the following window will appear:

```
Sounder Group : 1 is Silenced
Change the state using the Accept button
```

Press the Accept ▶ button to change the state of the selected sounder group between Silenced, Intermittent and Continuous. Should you want to test additional sounder groups, press the ▲ and ▼ buttons to change the sounder group's number.

When exiting this function the panel will ask for confirmation to silence the sounders to their normal settings. **Select Accept ▶ button to reset, or Escape ◀ button maintain the settings**.

TEST VADS IN GROUPS

This function allows you to test one, or all of the system's VADs groups by altering their state from Normal to Triggered.

Enter **AL3 (4444)** > **Engineer Functions** > **Test VADS in Groups.**

When the TEST VADS IN GROUPS prompt appears, press the Accept ▶ button and the group selection window will appear:

```
VAD Group  :  1
```

Press the ▲ and ▼ scroll buttons to select the sounder group you would like to test (1 to 16). Press the Accept ▶ button and the following window will appear:

```
VAD Group : 1 is Normal
Change the state using the Accept button
```

Press the Accept ▶ button to change the state of the selected VAD group between Normal and Triggered, shown below:

```
VAD Group : 1 is Triggered
Change the state using the Accept button
```

Should you want to test additional VAD groups, press the ▲ and ▼ and Accept ▶ buttons to change the VAD group's number and state.

TEST PANEL RELAYS

This function allows you to test the panel's three volt-free relays.

Enter **AL3 (4444)** > **Engineer Functions** > **Test Panel Relays.**

When the TEST PANEL RELAYS prompt appears, press the Accept ▶ button and the panel relay selection window will appear:

```
Panel Relay : 1
```

Press the ▲ and ▼ scroll buttons to select the relay you would like to test (1 to 3). Press the Accept ▶ button and the following window will appear.

```
Panel Relay : 1 is Normal
Change the state using the Accept button
```

▶

```
Panel Relay : 1 is Triggered
Change the state using the Accept button
```

Press the Accept ▶ button and the panel relay you have selected will trigger. To change the state back to Normal press the Accept ▶ button again.

WALK TEST

This function puts one or more of the system's detection zones into walk test mode. When a zone is in walk test mode, any detector/manual call point triggered on that zone will turn on all of the sounders (if enabled) that are mapped to that zone for a brief period (note that output sets will not operate).

Enter **AL3 (4444)** > **Engineer Functions** > **Walk Test.**

When the WALK TEST prompt appears, press Accept ▶ button. To select either a walk test with sounders either Disabled or Enabled, press the ▲ and ▼ scroll buttons shown:

With Sounders : Disabled	▶	With Sounders : Enabled

Press Accept ▶ button and the zone selection window appears:

Zone : All

Press the ▲ and ▼ scroll buttons to select the zone (1 to 32, or All) you want to put into walk test mode, then press the Accept ▶ button and the following window will appear:

Zone : 1 Normal operation	▶	Zone : 1 Walk Test Mode

Press the ▲ and ▼ scroll buttons to change the zone's state from Normal Operation to Walk Test Mode and press the Accept ▶ button. You now have the option to put additional zones into test at the same time.

To take zones out of test, reverse the procedure. Any zones in test will be indicated at all access levels via the DISPLAY ZONES IN TEST menu option and the Test LED on the front panel.

IDENTIFY LOOP BREAK

This function helps pinpoint the precise location of a loop break and a short circuit.

To identify a Loop Break

The following fault may have been displayed at the panel.

Loop Integrity Fault On Loop 1

Enter **AL3 (4444)** > **Engineer Functions** > **Identify Loop Break.**

When the IDENTIFY LOOP BREAK prompt appears, select the loop (1 or 2), press the Accept ▶ button and the panel will initialize both ends of the loop and the following is displayed:

Restarting Loop... Please Wait

The following is displayed for example:

Loop Integrity Fault On Loop 1

The LEDs on the devices either side of the loop break will light steady red.

Press the Menu button and the following is typically displayed:

```
Between Devices 7 & 8
Ground floor: Loop:1 Device 7
```

Fix the loop break at the location identified.

Press the Control Panel Reset button then press Escape ◀ button x 3.

The panel returns to normal if the loop break is fixed.

To identify a short circuit

The following fault may have been displayed at the panel.

```
S/C Detected
Loop 1
```

Enter **AL3 (4444)** > **Engineer Functions** > **Identify Loop Break.**

When the IDENTIFY LOOP BREAK prompt appears, select the loop (1 or 2), press the Accept ▶ button and the panel will initialize both ends of the loop and the following is displayed:

```
Restarting Loop...
Please Wait
```

The following is displayed for example:

```
Loop Integrity Fault
On Loop 1
```

The LEDs on the devices either side of the short circuit will light steady red.

Press the Menu button and the following is typically displayed:

```
Between Devices 7 & 8
Ground floor: Loop:1 Device 7
```

Fix the short circuit in the loop at the location identified.

Press the Control Panel Reset button then press Escape ◀ button x 3.

The panel returns to normal if the loop short circuit is fixed.

LOOP TEST

This function helps pinpoint loop wiring/communication faults by continually polling all loop devices for a specified number of times and reporting back both good and bad polls.

Enter **AL3 (4444)** > **Engineer Functions** > **Loop Test.**

When selected, press the Accept ▶ button, enter the loop (1 or 2) you want to monitor and enter how many times you want the panel to poll each loop device, for example 5 times, as shown below:

Test Loop : 1	▶	Number of Polls for each device : 5

Press the Accept ▶ button, the test will begin and a test status window will appear, showing the address currently being polled together with a running total of the number of good and bad polls.

The test will continuously scroll through the loop devices.

To halt this function press the Escape ◀ button.

The test results will appear in a window similar to the one below.

```
Loop:1  Device:1
Good Polls:128  Bad Polls:3
```

Use the scroll buttons to scroll through the polling results for the loop devices.

A high number of bad polls in a particular section of the system indicates a problem area for investigation, e.g. voltage drop, poor connection, etc.

To assert the LED output of the device being viewed, press the More Information button. You will be presented with a window similar to the one below:

```
Loop:1  Device: 1
Turn ON device LED?
```

Press the Accept ▶ button to activate the LED of the selected device. Once activated, you will be given the option to turn off the device LED by pressing the Accept ▶ button again.

DISPLAY DATABASE

This function allows you to view the panel's database of loop devices. Available on a loop by loop basis, the information displayed includes the device's type, address and description (zone and device text).

Enter **AL3 (4444)** > **Engineer Functions** > **Display Database.**

When the DISPLAY DATABASE prompt is accepted, select the loop number (1 or 2) and press Accept ▶ button and you will be prompted to enter the device number.

Press the ▲ and ▼ scroll buttons to select the device address, then press the Accept ▶ button.

```
Loop : 1      Device : 22
```

The information that is stored on the database that relates to that address will appear, for example:

```
Loop : 1      Dev : 22/0: I/O Unit
Zone : 1              Gents Toilet
```

In the above example, 'Dev: 22/0' denotes device address '22' and sub-address '0'. Sub-addresses only apply to I/O units which may have multiple channels and can be configured as both an input and an output.

You can now press the ▲ and ▼ buttons to scroll through the rest of the loop device database.

Press Escape ◀ button to exit.

VERSION NUMBERS

This function allows you to view the current version number of the panel's firmware and to check when the site's data was last changed.

Enter **AL3 (4444)** > **Engineer Functions** > **Version Numbers.**

When accepted, the following two windows (with details specific to the panel) will scroll in quick succession. Press Escape ◀ button to exit.

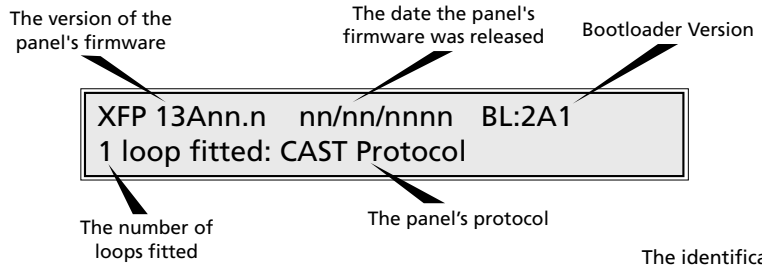

Matching site data codes, e.g. 48154/48154 and program checksum codes, e.g. 16886/16886, indicate that the panel is functioning correctly. Mis-matched numbers, e.g. 48154/40286, indicate that the panel's memory may be corrupt.

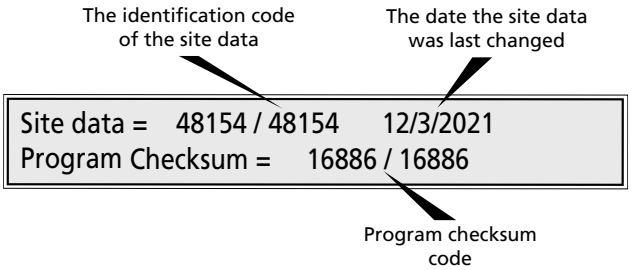

SHOW PSU STATS

This function allows you to view important information regarding the state of the panel's PSU and its standby battery supply.

Enter **AL3 (4444)** > **Engineer Functions** > **Show PSU Stats.**

When accepted, two windows (similar to the following) will scroll:

Batt = 24651mV Earth fault = OK Mains = OK Batt = OK Charge = OK	▶	Batt R = OK ('0.611') Mains = OK Batt = OK Charge = OK

Note: 'Batt R' shown above denotes the battery impedance. Refer to technical specification (page 48) for battery limits.

ENABLE/DISABLE EARTH FAULT

This function allows the panel's earth fault monitoring circuitry to be temporarily disabled.

Enter **AL3 (4444)** > **Engineer Functions** > **Enable/Disable Earth Fault.**

When accepted the following window will appear:

Earth fault monitoring is:- Enabled

Press the ▲ and ▼ scroll buttons to toggle between 'Enabled' and 'Disabled', then press Accept ▶ button.

SHOW DEVICE EEPROM

This function allows the panel to interrogate and view information held by CAST devices.

Enter **AL3 (4444)** > **Engineer Functions** > **Show Device EEPROM.**

When accepted, enter the loop (1 or 2) and address of the device, example shown below:

Loop : '1'	▶	Loop : 1 Device : 'nn'

When accepted, a list of device parameters, flags, data, Loop ID, Version, etc. is shown on the display. Press the ▲ and ▼ buttons to scroll through the data.

Hint! For an explanation of the numbers and information displayed, refer to the relevant CAST device documentation.

TURN LEDS ON/OFF

This function assists with fault-finding and wiring faults.

Enter **AL3 (4444) > Engineer Functions > Turn LEDS ON/OFF.**

When accepted, select the loop (1, 2 or All) and panel displays (similar to the following) will appear. At each display, press the ▲ and ▼ scroll buttons to toggle, then press Accept ▶ button to proceed.

Options are available to turn the device (polling) LEDS either ON or OFF, at Both Ends/End A Only/End B Only and the Poll Group (see tables below for device numbers).

Turn LEDs : OFF	▶	Turn LEDs : ON
Turn LEDs : Both Ends	▶	Poll Group : 0

CAUTION: ENSURE YOU DO NOT TURN ON MORE THAN THREE (3) POLL GROUPS AT THE SAME TIME, OTHERWISE TOO MUCH CURRENT WILL PASS THROUGH THE LOOP.

Poll Group	Device No.
0	1 to 15
1	16 to 31
2	32 to 47
3	48 to 63
4	64 to 79
5	80 to 95
6	96 to 111
7	112 to 127

Poll Group	Device No.
8	128 to 143
9	144 to 159
10	160 to 175
11	176 to 191
12	192 to 207
13	208 to 223
14	224 to 239
15	240 to 255

DIAGNOSTICS FUNCTIONS

These functions are for trained engineers only and are not detailed in this manual.

MAINTENANCE

Periodic system maintenance should be carried out on the system as prescribed in the local design, maintenance and installation regulations.

The Fire Alarm panel's standby batteries should be checked for integrity of the connections and deposits indicating venting. A periodic load test with the Mains supply disconnected should also be performed to ensure adequate battery capacity. Both batteries should be renewed if there is any doubt about their integrity.

The panel's event log should be checked for any faults that have automatically cleared, and these dealt with accordingly.

TECHNICAL SPECIFICATION

CAST XFP 1 Loop 32 Zone Panel (Part No. XFP501/CA/CON)
CAST XFP 2 Loop 32 Zone Panel (Part No. XFP502/CA/CON)

POWER SUPPLY	
Mains supply (a.c.)	230V ∿ 50/60Hz. Rated current 0.68A r.m.s.
Internal power supply	18.7Vd.c. to 29.0Vd.c. (Ripple voltage 500mV p-p)
Maximum rated current	2.5A @ 230Va.c. (2.5A battery only with Mains off)
Current specification	I max. a = 300mA (XFP501/CA/CON), I max. a = 406mA (XFP502/CA/CON) I max. b = 1.9A; I min. = 106mA
Maximum internal battery resistance	Ri max. = 1.1Ω
Earth fault monitoring	Yes (any conductor)
Mains supply & battery charger monitored for failure	Yes
Batteries monitored for disconnection & failure	Yes
Batteries protected against deep discharge	Yes
Maximum battery size and type	2 x 12V, 1.2Ah to 7Ah VRLA batteries. Use YUASA NP7-12/12S for LPCB approved systems.
Quiescent current	<50mA (1 loop unloaded - XFP501/CA/CON); <56mA (2 loops unloaded - XFP502/CA/CON) - with Mains failed
LOOP DRIVER (PROGRAMMABLE & MONITORED)	
Number of loop drivers	1 (XFP501/CA/CON) or 2 (XFP502/CA/CON)
Communication protocol	CAST®
Loop monitored for open and short circuit faults	Yes
On-board loop isolators	Yes
Auto-polling from each loop end & both ends (A & B)	Yes
Maximum output current & voltage per loop	500mA (Voltage: 40V)
Max. number of addressable devices (detectors, MCPs)	255 CAST devices for 1 loop panel (XFP501/CA/CON), 510 CAST devices for 2 loop panel (XFP502/CA/CON)
Device addressing options	Devices automatically addressed by the panel, or manually addressed using CAPROG
Short-circuit isolator in every loop device	Yes
Maximum loop cable length	1km
Number of programmable sounder groups	16
Number of programmable output sets	16
CONVENTIONAL SOUNDER CIRCUIT (PROGRAMMABLE & MONITORED)	
Number of sounder circuits	2 (programmable, independent conventional circuits)
End of line (EOL) resistor value	6800 ohm, 5% tolerance, 0.25W
Line monitored for open and short circuit faults	Yes
Each output fused at (maximum sounder output current)	400mA. Protected by resettable overload circuit.
Output voltage	19.5V minimum; 28V maximum
Maximum length per circuit	500m
AUXILIARY OUTPUTS (PROGRAMMABLE)	
Relay type / Output	Volt-free, single pole changeover / 1A, 30Vd.c. (maximum)
3 x auxiliary relays (Relay1, Relay2, Relay3)	Programmed from cause and effects
1 x failsafe fault relay	Active when no faults are present
'+24Vd.c.' Aux. power output	19.5V minimum, 28V maximum. Maximum current 100mA.
AUXILIARY INPUTS (PROGRAMMABLE, NON-MONITORED)	
2 x auxiliary inputs (I/P1, I/P2)	Connect to 0V to trigger, maximum input voltage 27Vd.c. (non-latching).
FUSES (to EN60127-2)	
Primary fuse (F1)	T 1A H 250V 20mm ceramic (T=Time Delay, H=High Breaking Current)
Battery fuse (F3)	3.15A F 20mm ceramic (F=Fast Acting)
CONTROLS AND INDICATORS	
Control buttons	Menu, More Information, Silence Internal Sounder, Control Panel Reset, Investigate, Silence/Resound Sounders
Event scrolling and menu access buttons	(scroll up) ▲ (1), (scroll down) ▼ (3), Accept ▶ (2), Escape ◀ (4)
Liquid crystal display	Two lines x 40 characters, backlit
Number of zonal LED indicators	32
Other LED indicators	(General) Fire, Supply Present, Test, Accessed, General Disablement, Phased Evacuation, General Fault, Power Supply Fault, System Fault, Sounder Status, Delays Running.
PHYSICAL	
Dimensions	435mm(W) x 270mm(H) x 85mm(D)
Weight / Construction	4.5kg (without batteries) / hinged metal lid, metal back box
IP Rating (to EN60529)	IP30 (indoor use only)
Paint finish	Light grey texture (RAL7035) epoxy paint
CABLING REQUIREMENTS	
Type of cable	Fire resistant screened cable, minimum size 1mm²
Maximum loop cable length	1km
Connector blocks	Fixed type, largest acceptable conductor size, 1.5mm²
Maximum allowable loop impedance (each conductor)	20 ohm
Maximum cable capacitance	.27µF
NETWORK (OPTIONAL)	
Network connection	Via AFP711 network driver card, one card fitted at each networked main panel
Network type	2-wire, screened, enhanced fire-resistant cable ≥1 mm², RS485 non-redundant network
Maximum number of main panels per network	8
Maximum no. of repeaters per non-networked main panel	8
Maximum cable length per network	1km (main panel network); 500m (repeater panel network)
PC/PRINTER INTERFACE	
PC connection	Via main PCB RS232 molex connector (lead supplied with XFP507 PC programming tools)
Printer connection	Not available
OPERATING CONDITIONS	
The enclosure is designed for indoor use only. The components are selected to operate within their specification when the environmental conditions outside the enclosure comply with class 3k5 of IEC 721-3-3. Temperature range: -10°C to +40°C. Maximum humidity: 95% non condensing.	
CERTIFICATES	
LPCB Certificate Number: 176b	LPCB Reference Numbers: 176b/27 (XFP501/CA/CON) & 176b/28 (XFP502/CA/CON)
Declaration of Performance: DOP0000080	CPR Certificate Numbers: 2831-CPR-F4631 (XFP501/CA/CON) & 2831-CPR-F4632 (XFP502/CA/CON)
Tested to: EN54-2:1997 + A1:2006 and EN54-4:1997 + A1:2002 + A2:2006	